Variable Chamber Round Balers

VB-VBP
3100 SERIES

www.KuhnNorthAmerica.com

Invest in Quality®

VARIABLE CHAMBER ROUND BALERS VB-VBP 3100 SERIES

TAKE HIGH DENSITY BALING TO A NEW LEVEL!

KUHN is offering a new generation of round balers enabling you to meet the new challanges of tomorrow.

The KUHN round balers are designed with your main baling needs in mind. They have been developed to help boost the profitability of your baling operation.

INNOVATION THROUGH PROXIMITY

The driving force behind KUHN is to supply the best quality in all aspects of baling. Employees at KUHN often come from a farming background, creating a great of personal involvement and a drawing on a great deal of knowledge and skill.

THE BALER SPECIALIST

Over 40 years of experience has given us valuable know-how and expertise in producing baling equipment. Our aim is to create simple, but efficient techniques to improve the quality of work for our customers.

VARIABLE CHAMBER ROUND BALERS VB/VBP in brief:

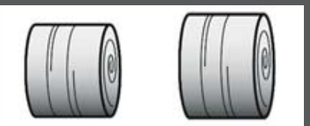

MODEL	4x5	4x6
VB 3155	●	
VB 3160	●	
VB 3165	●	
VB 3185		●
VB 3190		●
VB 3195		●
VBP 3165	●	

DESIGNED BY KUHN, MADE BY KUHN

INTRODUCING THE VB 3100 RANGE

The KUHN variable chamber round balers take high density baling to the next level. The VB 3100 Series offers a wide range of variable chamber round balers to match your individual preferences. KUHN variable chamber round balers are developed with the latest product innovations to ensure farmers and custom operators worldwide get the maximum benefit.

The VB 3155 & 3185 are designed for the baling of mostly dry materials such as hay and straw with the ability to bale some silage.

The VB 3160 & 3190 Premium balers, are standard ISOBUS balers that are designed for baling a wide range of forage materials, including silage.

For more extreme conditions we offer the VB 3165 and 3195 Premium XD balers. These balers are designed to work in the heaviest conditions across the world and are also available as baler-wrapper combination; the VBP 3165.

VB 3155 - 3185

VB 3160 - 3190 PREMIUM

VB 3165 - 3195 PREMIUM XD

VBP 3165 PREMIUM XD

VERSATILITY TO MEET YOUR OPERATION'S NEEDS

To better meet your operation's specific needs, there are four different intake options available on the VB 3100 round balers. Select from an OptiFlow open throat intake design, an OptiFeed non-cutting rotor, or a 14- or 23-knife OptiCut integral rotor.

OPTIMAL CROP PICKUP

All VB 3100 models feature a wide pickup with standard crop roller. The pickup is designed to maximize the full capacity of the machine. With a working width of 83 or 91 inches, the machine is capable of working in all windrows and will not let you down, even in the toughest conditions. Straight pickup tines help release the crop and reduce crop wrapping. The pickup roller compresses the crop against the pickup tines reducing friction, thus reducing leaf loss and increasing baler efficiency by evening out the windrow.

The new OptiFlow open throat models are equipped with an unrestricted 83” wide pickup. The driven bottom and top roller combination brings maximum thrust to the crop flow for full capacity.

The 91” rotor model pickup features standard pendulum frame and optional pivoting pickup wheels to allow the pickup to adapt to changing field conditions.

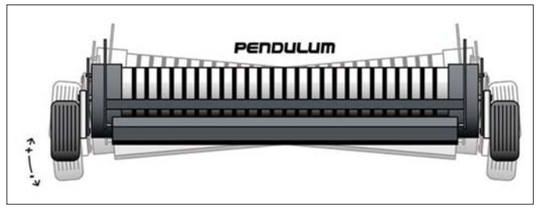

Camless-shaped crop guides, on 91” pickups, result in more aggressive and efficient pickup by exposing more of the tine when needed and by pulling the crop away from the tines as it approaches the intake. A cam track pulls the tines straight down in the rearward position to avoid wrapping, making this the only hybrid pickup on the market today.

NON-CUTTING INTAKE SYSTEMS

If your operation doesn't require cutting, the OptiFlow and OptiFeed intake systems ensure a controlled and consistent crop flow to the bale chamber. (availability dependent on VB model):

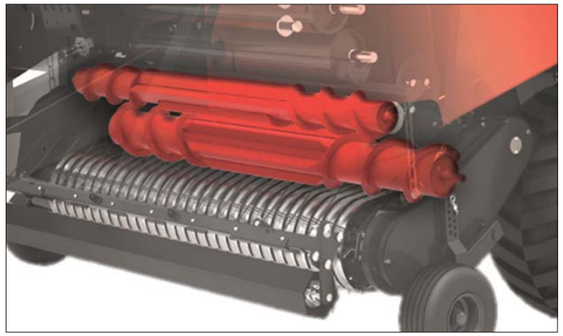

OPTIFLOW – OPEN THROAT
The OptiFlow open throat intake is an unrestricted intake unit for maximum capacity in all crop conditions. In heavier conditions, like big wide straw or silage windrows, the top roller is acting like a pre compactor which is powered by the primary driveline of the baler. There are no stuffer fingers which can disturb the flow and therefore limit the intake capacity. This generates a huge input potential and prevents plugging of the unit resulting in a high output and minimum downtime.

Available on VB 3155, 3160, 3185 & 3190 models only

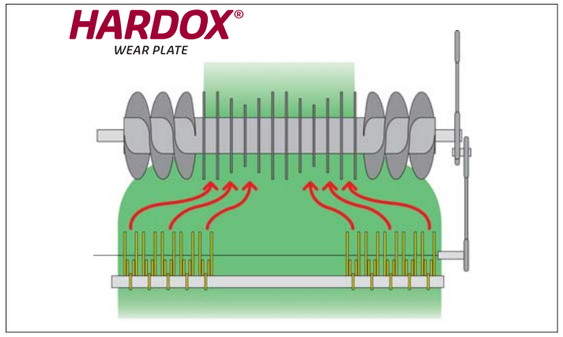

INTEGRAL ROTOR
Across the whole VB 3100 range is our patented Integral Rotor Technology. This simple, low-maintenance intake system guarantees an enormous throughput capacity at all times. The short distance between rotor and pickup tines maintains consistent crop flow. The design of this force-fed intake makes higher forward speeds possible for increased productivity and reduces crop damage.
The Integral Rotor on all models, except VB 3155 & 3185 units, are provided with rotor tines made out of Hardox® wear plates. Hardox combines extreme hardness and toughness to reduce rotor tine wear. Longer wearing life of the rotor tines will help to provide time and money savings for the operator.

OPTIFEED ROTOR
The OptiFeed rotor with single feeding tines and integrated augers, provide a consistent flow of crop into the bale chamber. This rotor design helps even out incoming windrows for consistent bales every time.

Available on all models except VBP 3165

CUTTING INTAKE SYSTEMS

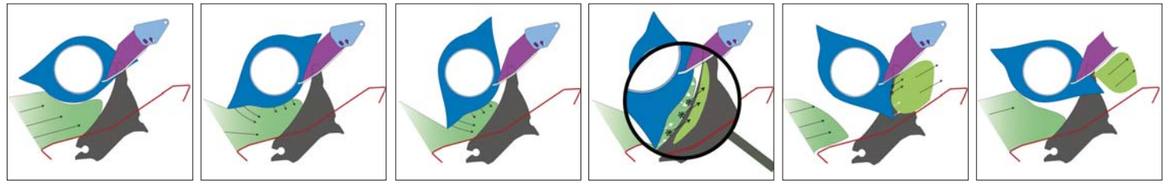

The Opticut (OC) cutting systems are designed for unlimited intake capacity and excellent cutting quality.
There are two different types of KUHN OC cutting systems on the VB 3100 Series. (availability dependent on VB model): Due to the unique bi-lobe rotor and cam-shaped lobe, the silage is guided and drawn to the knives in an early stage which improves flow and cutting performance and also helps prevents unwanted plugging. As a result of the redesigned intake unit the power requirement of the round balers is decreased.

OPTICUT 14
The Integral Rotor with the 14-knife OptiCut system is designed to even out the windrow and force-feed the crop into the baler for maximum throughput. The 14-knife OptiCut cutting system provides a theoretical cutting length of 2 ¾". Each single knife is spring protected against damage from foreign objects. With group selection (VB 3165 & 3195 models) the operator can choose to have 0, 4, 7, 7, or 14 knives in operation.

Available on all models

OPTICUT 23
The Integral Rotor with the 23-knife OptiCut system from KUHN has the benefits of intensive cutting and mechanical protection. The 23-knife OptiCut system provides a theoretical cutting length of 1 ¾". Each single knife is spring protected against damage from foreign objects. With group selection the operator can choose to have 0, 7, 11, 12, or 23 knives in operation.

Available on VB 3165, 3195 & VBP 3165 models only

GROUP SELECTION
Mechanical group selection is available on VB 3165-3195 & VBP models. Easy knife changing will provide you with true driver comfort.

ROTOR DISENGAGEMENT AND DROP FLOOR TECHNOLOGY
When dropping of the floor is not sufficient, the rotor drive can manually be disengaged from the bale chamber drive, enabling the binding and discharge of the bale from the chamber. The rotor disengagement and drop floor technology ensure a quick clearance in case of an obstruction.

In case of a rotor obstruction, the floor and knives can be lowered hydraulically from the tractor cab. After the obstruction is cleared, they can easily be brought back into work position.

THE IMPORTANCE OF BALE SHAPE

Consistent, perfectly shaped bales represent quality in every form. Firm round bales indicates that the majority of air has been removed from the bale, improving feed quality preservation!

PROGRESSIVE DENSITY – THE KUHN SOLUTION

The Progressive Density system has proven its value on all KUHN VB balers. The system increases tension as the bale grows providing a firm bale with a tough outer shell.

HOW DOES IT WORK?

As the bale grows within the bale chamber, the belt tensioning arm is subjected to steadily increasing resistance from two hydraulic cylinders and a spring tensioner. So as the diameter increases, the bale's density does too. The result is a very firm bale with a moderate core – not too soft, not too hard. With a tougher outer layer, straw bales will be more tolerant to bad weather conditions, while silage bales will maintain their shape for improved stacking and easier handling.

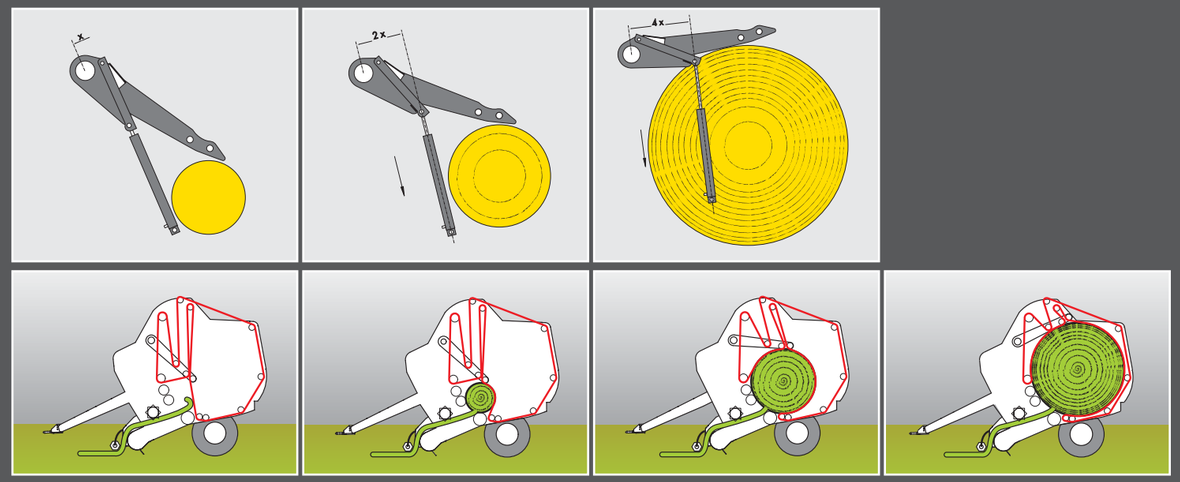

FAST, PERFECT BALE FORMATION

The 5 belt, 3 roller design of the VB 3100 Series bale chamber ensures fast, consistent bale formation whatever the intake system. The aggressive profile of the top chamber roller improves crop contact and reduces crop loss. The front segment of the baler is fitted with a large smooth roller and driven cleaning roller that prevents crop build up at the front of the machine.

The unique mix of the KUHN Progressive Density system and smart bale chamber design guarantees perfect bale formation every time.

VB 3100 bale chamber

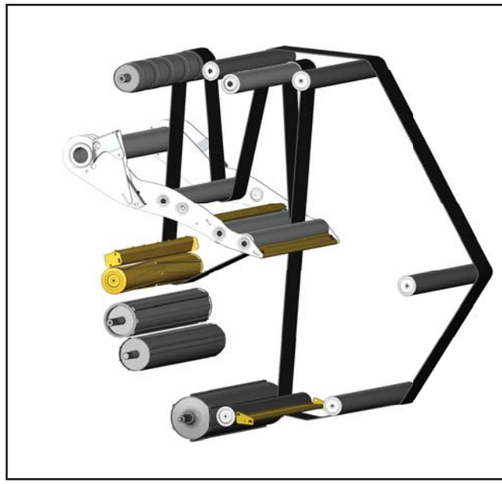

VB 3155 & VB 3185	
BALE FORMATION	5 BELTS + 3 ROLLERS
BELTS	LACED OR ENDLESS
MAXIMUM BALING PRESSURE	2,900 PSI
PRESSURE SETTING	PROPORTIONAL VALVE FOR IN-CAB PRESSURE AND SOFT CORE SETTING
CHAIN OILER	MASTER LUBRICATION CHAIN OILER – OPTIONAL

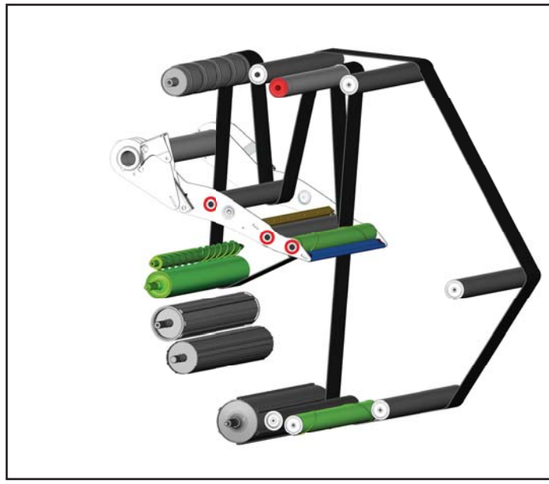

VB 3160 & VB 3190	
BALE FORMATION	5 BELTS + 3 ROLLERS
BELTS	LACED OR ENDLESS
MAXIMUM BALING PRESSURE	2,900 PSI
PRESSURE SETTING	PROPORTIONAL VALVE FOR IN-CAB PRESSURE AND SOFT CORE SETTING
BELT GUIDE ROLLERS	TENSION ARM & TOP CHAMBER ROLLERS HEAVY BEARINGS AND SEALS
CHAIN OILER	MASTER LUBRICATION CHAIN OILER – STANDARD

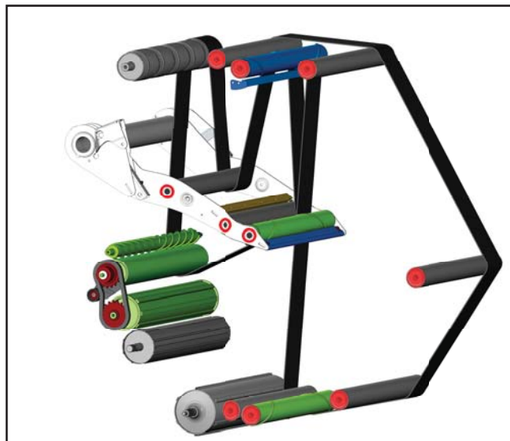

VB(P) 3165 & VB 3195	
BALE FORMATION	5 BELTS + 3 ROLLERS
BELTS	ENDLESS + SECOND DRIVE ROLLER
MAXIMUM BALING PRESSURE	3,400 PSI INCLUDING + LOW DENSITY KIT
PRESSURE SETTING	PROPORTIONAL VALVE FOR IN-CAB PRESSURE AND SOFT CORE SETTING
BELT GUIDE ROLLERS	ALL BELT GUIDE ROLLERS HAVE HEAVY BEARINGS AND SEALS
CHAIN OILER	BEKA MAX CONTINUOUS CHAIN OILER

Higher bale pressure settings can provide up to 10% more bale weight in dry crops.

FIRM BALE SHAPE

STRETCH TYPE NET WRAPPING SYSTEM

One of the final steps in creating the perfect bale is the wrap. Securing a bale to protect it from the elements and from losing its shape is one of the most crucial steps. The less time required to secure the bale, the higher the baling operation output. KUHN net & twine solutions guarantee reliable and secure wrapping.

EXCELLENT NET WRAPPING

The net wrap with active stretch technology ensures a firm bale shape with constant net tension throughout the entire wrapping cycle. The net is fed into the front of the bale chamber to ensure it is taken by the bale immediately. A second net roll storage enables the operator to carry a sufficient net supply for a longer working day. Changing of the net roll can be done easily while standing safely on the ground.

KUHN's innovative design maintains constant net tension during the wrap process. The net wrap system runs at 90% of the bale's rotational speed to be able to stretch the net without breaking it. After leaving the bale chamber, the bale will not expand and therefore it will hold its density. The net wrap system spreads the net to the corners of the bale to prevent air pockets once the bale is wrapped, which will preserve the forage quality for longer.

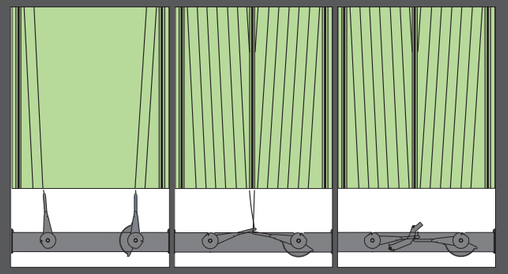

Twin tubes feed twine simultaneously

Center twines overlap

No loose ends at edge of bale

TWINE SYSTEM

When using the double twine arm system, the tying cycle time is reduced to a minimum. In the twine tying cycle, both of the twines start at the bale edge and overlap before moving to the center of the bale. In the center of the bale they overlap again, this ensures the twines are fixed and that there are no loose ends.

When required, the VB and VBP also can be equipped with a combination of twine and net binding.

SIMPLE & PRODUCTIVE

The new VB 3155 and 3185 models are the right round balers for the job, providing the capability and performance you expect without any extras to weigh you down. We started with a reinforced pickup, new top forming roll, reinforced end gate roller and passive Drop Floor technology. You can choose the OptiFlow open throat, our popular OptiFeed non-cutting rotor intake or the OptiCut 14 – a cutting rotor new to this class of balers from KUHN. The end result is a round baler that will handle a variety of crops, moistures and crop conditions with ease.

VT 30 3.5" Color Display

Low-profile, 4-tine bar pickup

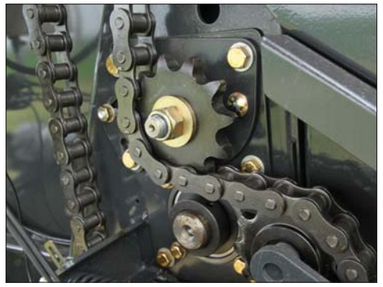

Heavy-duty IWIS chains and hardened sprockets

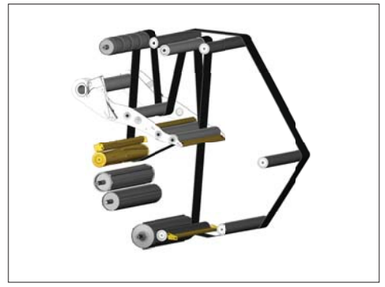

Silage ready scrapers

VARIABLE CHAMBER ROUND BALERS VB 3160 / 3190

PREMIUM PERFORMANCE

Hard work calls for a hardworking round baler The VB 3160 and 3190 Premium round balers are equipped with full ISOBUS control and a wide range of intake options including the OptiFlow open throat, OptiFeed non-cutting rotor and the OptiCut 14 cutting rotor. Newly added u-joints in the main driveline, a heavier crown roll, bigger bearings and new tension arm rollers improve the lifetime of the machine. These machines work well handling anything from heavy silage to dry cornstalks with the added convenience of ISOBUS monitors and upgraded silage features.

ISOBUS full color monitors

Low-profile, 5-tine bar pickup

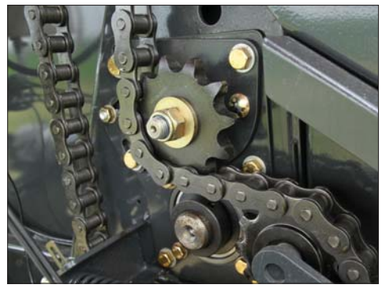

Heavy-duty IWIS chains and hardened sprockets

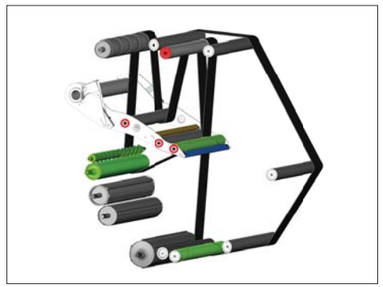

Increased silage capabilities with profiled cleaning rollers

VARIABLE CHAMBER ROUND BALERS VB 3165 / 3195 / VBP 3165

EXTREME DENSITY

The KUHN VB 3165 and 3195 Premium XD round balers are designed to work in the toughest conditions throughout the world and are ideal for custom operators who need extra density in straw. Built for high-volume hay production, these models feature the most heavy-duty components to keep you producing rock-hard bale after bale, day after day.

HIGHER DENSITY
The VB 3165-3195 balers can run on a higher baling pressure with up to 10% increase of bale weight in dry crops.

EXTREME SILAGE CAPABILITIES
The bale chamber is provided with a second belt drive to keep the belt turning in the heavy silage conditions. In addition, belt guide rollers in the bale chamber carry heavier bearings and improved seals to meet the highest demands.

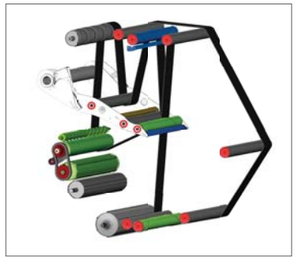

Heavy bearings and seals

Extremely heavy-duty drive chains

DURABILITY
All VB 3165-3195 models have increased overall driveline quality. The integration of u-joints in the main line, heavy-duty drive chains and belt track rollers contribute to an improved lifetime of the machine. The second belt drive roller helps guarantee a secure belt drive in all crop conditions. In addition, all VB 3165/3195/VBP 3165 models are equipped as standard with Beka Max continuous chain oiling system. The sturdy and wide oil brushes on the chains ensure perfect lubrication.

U-joints in the main driveline

Separate knife/Drop Floor controlled from the tractor seat

Beka Max continuous chain oiling system

Sturdy and wide oil brushes

Secondary drive belt roller

TWO TECHNOLOGIES COMBINED

Two technologies from KUHN combined in one machine, the KUHN VBP BalePack. This high-capacity, easy-to-use machine is capable of working on even the steepest slopes, in all crop conditions.

RAPID AND SECURE BALE TRANSFER

To minimize idle time and maximize output, a rapid bale transfer is required. The side guide protection plates of the KUHN VB BalePack ensure a rapid and secure bale transfer even when working in steep or sloping fields. The 4-belt wrapping table with 2 large rollers and 4 side cones provide maximum bale traction, bale rotation and proper film overlap, regardless of the bale shape.

TWIN LOADING FORK SYSTEM OFFERS FASTER BALE TRANSFER BY UP TO 40%.

1. The first loading fork (in red) collects the bale as it leaves the bale chamber. The wrapping table is tilted forward; ready to receive the bale.
   Advantage: There is no possibility for the bale to roll off the rear of the wrapping table when facing up a steep slope.

2. The second loading fork (in blue) transfers the bale onto the wrapping table. The tailgate shuts automatically, with the second loading fork still in a raised position.
   Advantage: This saves time and also prevents any chance off the bale rolling forward into the tailgate when facing downhill.

3. The wrapping table returns to its horizontal position and the second loading fork is lowered. The bale lies on the wrapping table supported by four wide belts and four lateral guide rollers.
   Advantage: Regardless of the bale shape, the table offers good support and allows perfect wrapping.

4. The IntelliWrap wrapping system with closely mounted pre-stretchers rapidly wraps the bale, either in conventional or (optional) 3D mode.
   Advantage: Vertically mounted pre-stretch units ensure no grass gets caught between the layers of film during the wrapping process. This results in effective sealing between film layers for the highest possible silage quality preservation.

5. The low mounted table allows the wrapped bale to be gently ejected while driving, either automatically or manually.
   Advantage: When working on sloping grounds, the wrapped bale can be ejected while the net or twine is being applied on the following bale, saving time and increasing output potential.

FULLY AUTOMATIC ROTOR DEBLOCK SYSTEM

The baler's overload protection clutch activates whenever the baler's intake gets blocked by the amount of crop to be fed in. The Drop Floor automatically* lowers and the knives are retracted. The operator can monitor the ongoing process via the terminal. After the PTO is re-engaged, the rotor restarts and the crop is guided unobstructed into the bale chamber, the Drop Floor and knives automatically return into position. **Depending on driving mode*

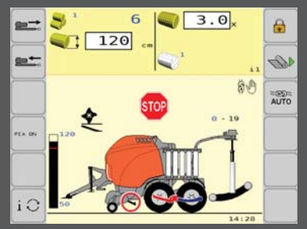

FULLY AUTOMATIC KNIFE CLEANING

The OptiCut knives are automatically cleaned after the predefined number of bales has been reached in the program. This will keep the knife slots clean for easier removal of the knives at the end of the working day.

FULL WRAPPING FLEXIBILITY

Get full wrapping flexibility with IntelliWrap. Continuous control the film overlap and required amount of wrapping layers (4, 5, 6, 7, 8, 9...) to match your local circumstances, crop conditions, and storage periods. An excellent distribution of the film around the bale and precise overlap of the film provides maximum efficiency and prolonged silage quality preservation.

5 LAYER FILM SELECTION

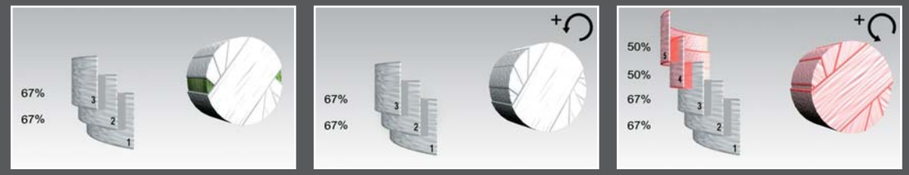

The bale is covered with 3 layers at 67% overlap.

The bale rotation speed is increased.

Final 2 layers at 50% overlap.

DISCOVER THE ADVANTAGES OF BOTH INTELLIWRAP AND 3D WRAPPING IN ONE MACHINE

KUHN's 3D wrapping distributes the total film quantity more uniformly and efficiently across the entire surface of the bale.

3D wrapping starts by covering the corners of the bale.

Further wrapping of the cylindrical surface of the bale until approximately 80% is covered.

Switches to conventional wrapping for 100% film coverage.

3D wrapping will first apply the film where it is most needed, the corners of the bale. After finishing the complete 3D wrapping cycle, approximately 80% of the bale is already covered in film. Then the conventional wrapping will make sure that 100% of the bale is covered with stretch film. The film has a perfect oxygen barrier because all layers are glued together with tack. The cylindrical wrap ensures that the bale retains its shape, even after long storage periods.

USE OF BOTH INTELLIWRAP AND 3D WRAPPING PROVIDES WELL-SHAPED, TIGHTLY SEALED BALES AND WILL MAINTAIN SILAGE QUALITY OVER LONG STORAGE PERIODS.

INTUITIVE USER INTERFACES

The key to achieving the productivity you expect from your KUHN machine, are the user interfaces. We listened carefully to the users of our machines to develop our new user interfaces and monitors. The objective is to have a clear view of what your machine is doing at anytime and to have all important settings at your fingertips. This ensures that you have full control of your machine.

VT 30

The VT 30 monitor controls the baling and tying/wrapping process all from the tractor cab. The 3.5" color screen provides the same user interface as the other KUHN balers, making it an easy to understand monitor for all drivers. The VT 30 is equipped with both touchscreen and soft keys for an intuitive control under all circumstances. It is connected to the tractor using a 3-pin connector.

CCI 50

The Premium VB models are fully ISOBUS compatible. This means the intuitive user interface can be displayed on all VT monitors. The CCI 50 is a full ISOBUS monitor with a 6" color screen. It can be controlled using the touchscreen and/ or the soft keys. A selection of CCI Apps can be used on the CCI 50 to utilize your monitor all year round.

CCI 1200

The CCI 1200 is our state-of-the-art ISOBUS monitor. The 12" color touchscreen has a programmable view. For example, you can see both the camera and the machine user interface on the same screen. It offers wide compatibility with CCI Apps and can be your portal to precision farming. The CCI 1200 comes in a storage box for it to be stowed away securely when not in use.

ELECTRONICS

	VB 3155 - 3185	VB 3160 - 3190	VB 3165 - 3195	VBP 3165
VT 30 - NON ISOBUS COMPATIBLE	●			
CCI 50 - ISOBUS COMPATIBLE		●	●	●
CCI 1200 - ISOBUS COMPATIBLE		●	●	●

FULL VISIBILITY

The VB / VBP range can be equipped with a KUHN camera system to provide optimal visibility and safety around the machine. There are two kits available, one kit is compatible with the CCI terminal, the other one consists of a separate monitor and a camera.

CUSTOMIZED TO FIT YOUR OPERATION

OPTIONS

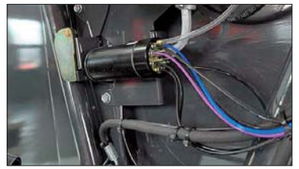

Automatic chain oiling system allows individual adjustment of the amount of oil on each chain

The second drive roller secures bale rotation even in difficult crops (standard on the VB(P) 3165 & 3195)

1,000 rpm drive kit – 1 3/8" 21-spline CV for use with larger horsepower tractor

Pivoting pickup wheels for extreme conditions to ease wheel and tire stress

3D wrapping distributes film more more uniformly and efficiently across the entire surface of the bale (VBP only)

Small bale kit allows you to wrap bales with a diameter of 31.5" and up (VBP only)

Bale turner gently places the bale on a flat end during unloading (VBP only)

GENUINE KUHN PARTS®

No part better fits a KUHN machine than an original KUHN part

Here at KUHN, we produce spare parts built to last in our very own foundries, our forges and our ultra-modern production facilities. You can trust in our longstanding know-how, based on almost two centuries of experience. With KUHN Parts, you can be assured of the highest quality parts and customer service in the agriculture equipment industry. Seven distribution centers, located strategically throughout North America, ensure that KUHN, KUHN Knight and KUHN Krause dealers have access to parts and assistance so you can get back in the tractor.

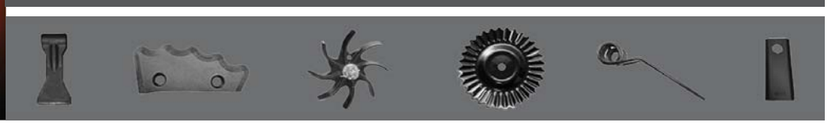

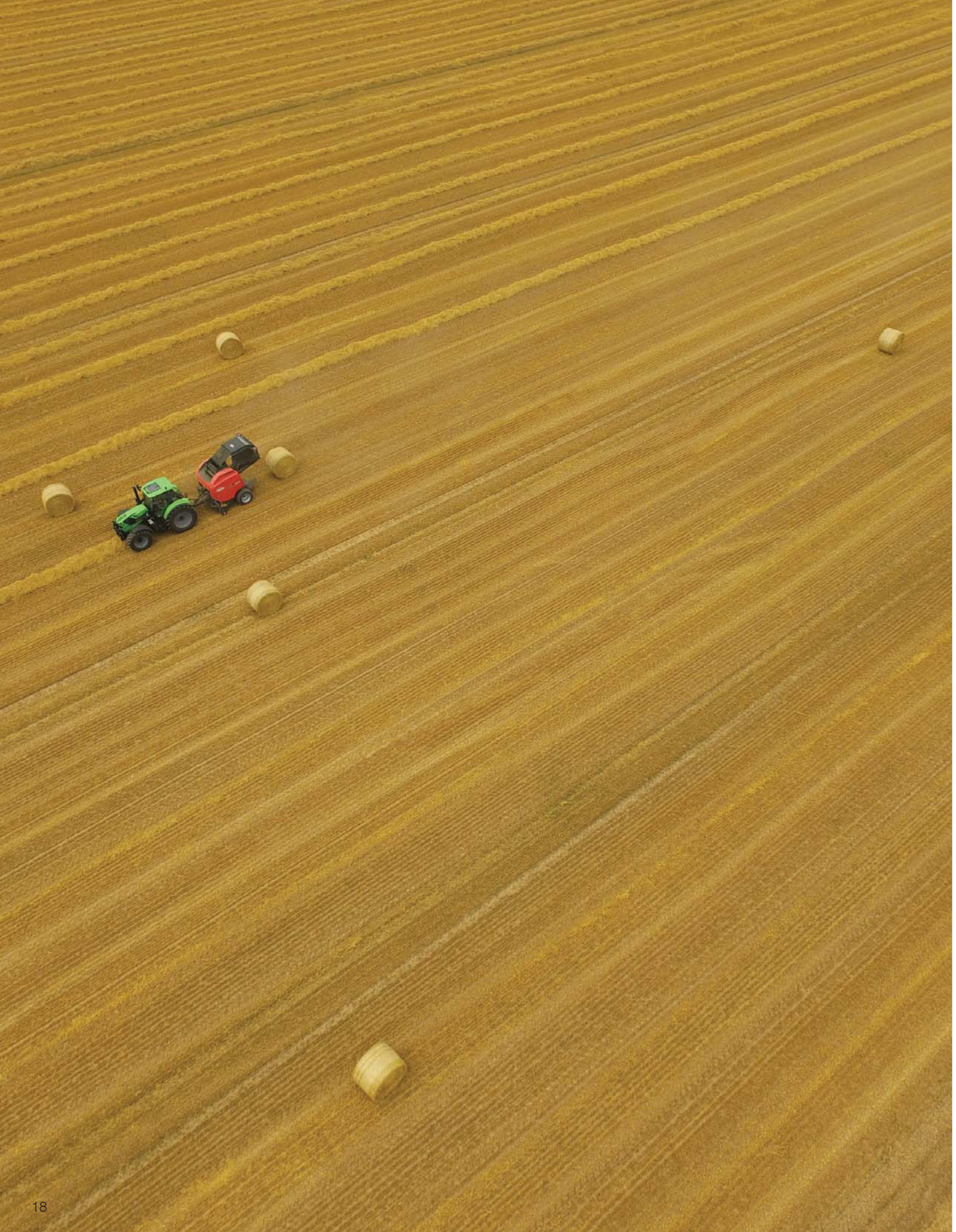

Model Specifications

	VB 3155 / 3185			VB 3160 / 3190			VB 3165 / 3195			VBP 3165	
	OPTIFLOW	OPTIFEED	OPTICUT 14	OPTIFLOW	OPTIFEED	OPTICUT 14	OPTIFEED	OPTICUT 14	OPTICUT 23	OPTICUT 14	OPTICUT 23
Bale Dimensions											
Bale Size	4x5 / 4x6 (1.2 m x 1.5 m / 1.2 m x 1.8 m)			4x5 / 4x6 (1.2 m x 1.5 m / 1.2 m x 1.8 m)			4x5 / 4x6 (1.2 m x 1.5 m / 1.2 m x 1.8 m)			4 x 5 (1.2 m x 1.5 m)	
Bale Diameter	31.5” - 63”/73” (80 cm - 160/185 cm)			31.5” - 63”/73” (80 cm - 160/185 cm)			31.5” - 63”/73” (80 cm - 160/185 cm)			31.5” - 63” (80 cm -160 cm)	
Bale Width	47” (120 cm)			47” (120 cm)			47” (120 cm)			47” (120 cm)	
Bale Chamber											
Bale Chamber	- 1 Starter Roller - 2 Bale Chamber Rollers - 5 Belts			- 1 Starter Roller - 2 Bale Chamber Rollers - 5 Belts			- 1 Starter Roller - 2 Bale Chamber Rollers - 5 Belts			- 1 Starter Roller - 2 Bale Chamber Rollers - 5 Belts	
Belts	Laced Only	Laced Std., Endless Opt.	Endless Std., Laced Opt.	Laced Only	Laced Std., Endless Opt.	Endless Std., Laced Opt.	Endless belts and second drive roller standard			Endless belts and second drive roller standard	
Intake											
Pickup Width	83” (211 cm)	91” (231 cm)		83” (211 cm)	91” (231 cm)		91” (231 cm)			91” (231 cm)	
Number of Tine Bars	4		5	4	5		5			5	
Pickup Gauge Wheels	Fixed	Fixed / Pivoting Opt.		Fixed	Fixed / Pivoting Opt		Fixed / Pivoting Opt.			Fixed / Pivoting Opt.	
Pickup Wind Guard	Standard			Standard			Standard			Standard	
Bale Tying System	Twine, Net, Twine & Net			Net or Twine & Net			Net or Twine & Net			Net or Twine & Net	
Twine Capacity	8			–			–			–	
Net Wrap Capacity	3			3			3			3	
Twine & Net Capacity	8 Twine, 3 Net			8 Twine, 3 Net			8 Twine, 3 Net			8 Twine, 3 Net	
Drop Floor	–		Passive	–	Optional	Standard	Standard			Standard	
Operation											
Electronic Monitor	VT 30 w/ Left & Right Indicator			ISOBUS – CCI 50 & CCI 1200			ISOBUS – CCI 50 & CCI 1200			ISOBUS – CCI 50 & CCI 1200	
Bale Pressure Setting	Monitor			Monitor			Monitor			Monitor	
Independent Knife/ Drop Floor Selection	–		Manual	–		Manual/ Monitor	–	Monitor		Monitor	
Tires											
11.5/80-15	Standard		Optional	–			–			–	
15.0/55-17	Optional		Standard	Standard			–			–	
19.0/45-17	Optional		Optional	Optional			–			–	
500/45-22.5	–			Optional			Standard			Standard	
500/45R22.5 FL693M	–			–			–			Optional	
Hydraulic/pneumatic brakes	Optional/Optional			Optional/Optional			Optional/Optional			Standard/Optional	
Machine dimensions											
Length	158” (402 cm)			158” (402 cm)			158” (402 cm)			256” (650 cm)	
Width	97” (246 cm)			97” (246 cm)			97” (246 cm)			117” (298 cm)	
Height	105” (267 cm) / 113” (287 cm)			105” (267 cm) / 113” (287 cm)			105” (267 cm) / 113” (287 cm)			105” (267 cm)	
Weight	5,512 lbs (2,500 kg)	6,393 lbs (2,900 kg)	6,724 lbs (3,050 kg)	5,600 lbs (2,540 kg)	6,702 lbs (3,040 kg)	7,143 lbs (3,240 kg)	7,099 lbs (3,220 kg)	7,540 lbs (3,420 kg)	7,650 lbs (3,470 kg)	12,456 lbs (5,650 kg)	
Min tractor requirement*	62 hp (45 kW)	67 hp (50 kW)	80 hp (60 kW)	62 hp (45 kW)	67 hp (50 kW)	80 hp (60 kW)	62 hp (45 kW)	67 hp (50 kW)	80 hp (60 kW)	90 hp (68 kW)	
PTO	540 Shear Bolt Std. / 540 Cam-Clutch Opt.	540 Cam-Clutch Std. or 1,000 Opt.		540 Shear Bolt Std. / 540 Cam-Clutch Opt.	540 Cam-Clutch Std. or 1,000 Opt.		540 Cam-Clutch Std. or 1,000 Opt.			540 Cam-Clutch Std. or 1,000 Opt.	

* Horsepower requirement may vary with different crops, conditions, and options used. Consult operators manual for proper tractor sizing.

COMPLEMENTARY PRODUCTS

MORE PRODUCTS TO MEET YOUR NEEDS

With over 700 models of equipment, we have the most complete implement line in the industry. Whether you have a small or large operation, we have a broad range of models and options to help fit your diverse needs.

1. Wheel Rakes
2. Mower Conditioners
3. Square Balers
4. Bale Wrappers
5. Bale Processors
6. TMR Mixers

For more information about your nearest KUHN dealer and other KUHN products, visit our website at

www.KuhnNorthAmerica.com

YouTube

Visit our YouTube channel to watch our latest product videos.

KUHN

www.KuhnNorthAmerica.com

Your KUHN dealer

KUHN NORTH AMERICA, INC.
Corporate Headquarters
1501 West Seventh Avenue - Brodhead, WI 53520
Phone: (608) 897-2131 Fax: (608) 897-2561

Information given in this document is only for informational purposes and is non-contractual. Our machines are in compliance with North American safety standards. In our literature, and for improved illustration of certain details, some safety devices may not be in operating position. When operating these machines, these devices must be operated in accordance with the requirements indicated in the operator's manuals and assembly manuals. We reserve the right to change any designs, specifications or materials listed without further notice. Machines and equipment in this document can be covered by at least one patent and/or registered design. Trademarks cited in this document may be registered in one or several countries.

Find us on

Printed in USA 706482US 1117 Copyright 2017 Kuhn North America, Inc.