PRODUCT CATALOGUE

BALE PRO® EQUIPMENT

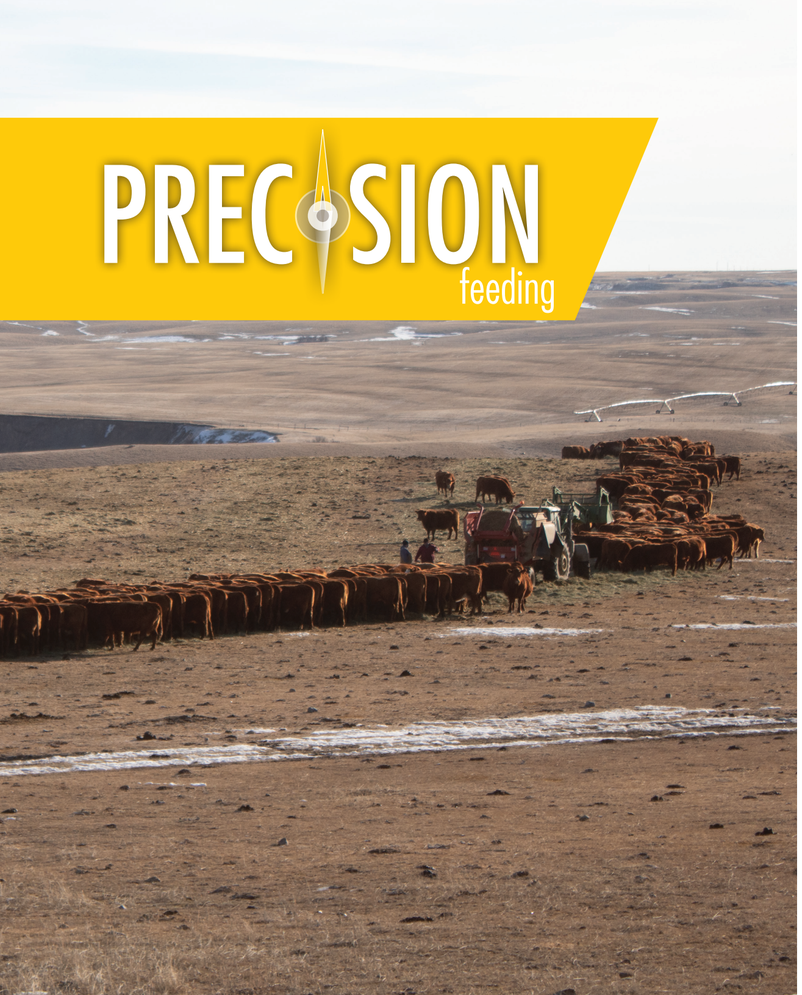

CONTENTS

OUR MISSION

Our mission is to design, manufacture and distribute the highest quality, most durable and reliable farm equipment in the world, which is affordable and meets or exceeds the expectations of our most demanding customers.

Highline Manufacturing is a division of Bourgault Industries Ltd. and as such shares a common standard of "pursuing perfection" in their business approach. Highline's shared approach is to develop relevant products of the highest quality that exceed the expectations of our most discerning customers.

PRESIDENT'S MESSAGE

As everyone was vividly reminded in the early days of the COVID19 pandemic, food is absolutely essential for human existence. In recent times, until this event occurred, food availability was something that was taken for granted in most of the Western world. However, the onset of COVID19 reminded everyone that not much else matters if one does not have food to eat. Clearly, producing food is a crucial and meaningful occupation for which food producers should be very proud. And in the world of food production, truly, it is difficult to find a more demanding way of making a living than by working with livestock!

The Research and Development team at Highline® Manufacturing is continuing its efforts to bring new, innovative, high quality products to the market, as well as continuing to refine and make improvements to existing products, in order to help livestock producers operate more efficiently, as well as to make their lives a little bit easier. Taking the time to review Highline® product offerings found in this catalogue will allow you to discover how Highline's innovations could benefit your livestock operation.

If you have any questions or require additional information about any of this equipment, please visit highlinemfg.com, contact your nearest Highline® dealer or call us directly at 1-800-665-2010. You can also see Highline® products in action on YouTube.com.

PRESIDENT OF BOURGAULT INDUSTRIES LTD.

Gerry Bourgault, P. Eng.

"Clearly, producing food is a crucial and meaningful occupation for which food producers should be very proud."

GENERAL MANAGER'S MESSAGE

Thanks for your interest in Highline® bale processors. Highline® has been manufacturing bale processors since the early 90s, with a number of models being introduced over the years. 2021 marks the release of the new 60 series bale processors. The design features and improvements on these machines are based on feedback received from the farmers who use Highline® bale processors. Examples include the new feed rollers on the BP 660, the new side deflectors on the BP 661, the new bale lift on the BP 965, the ability to process rounds or squares with the BP 663 TOP GUN®, and the new higher capacity, hydraulic drive Grain Tank option. There are a number of other enhancements described in the catalogue so I encourage you to have a read through it and see what Bale Pro® is best for you and your operation. Then make sure you get in contact with your local Highline® dealer and request a demo of one of these new machines! The Highline® team looks forward to visiting your farm soon.

GENERAL MANAGER OF HIGHLINE MANUFACTURING

Bob Cochran, P. Eng.

"The design features and improvements on these machines are based on feedback received from the farmers who use Highline® bale processors."

PRECISION feeding

1 Test It.

Testing your feed is critical to knowing what you have and setting your rations accordingly.

2 Chop It.

The Highline® Feed Chopper™ attachment reduces cut length and blends materials, reducing sorting and waste by 20-30%.

3 Add It.

The Highline® Grain Tank attachment accurately measures grain or supplement and blends it with a lower quality feed.

4 Blend It.

The CFR 1251 blends 2 different forage types with grain making a perfect mix saving up to $100/cow per year over long forage.

The beef industry has its goals clearly identified and are moving positively towards them. Qualities of efficiency and environmental sustainability can be seen in action on most beef operations today with the general acceptance that they bring value to the farmer and the consumer. There are many challenges ahead that continue to be priorities such as reducing carcass trimmed fat and increasing lean tissue deposition rates. Fat is deposited when nutrients are fed in excess of what the animal body needs for all body processes. Historical feeding methods have included placing large amounts of feed out for animals in excess of their needs to be sure all animals have feed. This is wasteful and contributes to losses rather than profit. Today each management decision can be evaluated as to how it impacts profit ahead of implementation and then a plan can be laid out which positively impacts profitability.

Highline® has developed feeding equipment to assist producers in precision delivery of nutrients optimizing utilization of forages and keeping costs low. Chopping, blending, and delivering a best cost solution to feeding is available from multiple models of the Bale Pro® series and now from the AccuMix™ 1000s self-loading self-propelled total mixed ration mixer. Designed and built in Saskatchewan and available to you for profitable livestock farming.

CORPORATE RUMINANT NUTRITIONIST

John Maltman, M.Sc., PAg.

"Highline® has developed feeding equipment to assist producers in precision delivery of nutrients optimizing utilization of forages and keeping costs low."

For further details on Precision Feeding visit: www.highlinemfg.com

Efficiency in feeding begins with analysis of the ingredients. From year to year forages can vary in maturity when cut and result is different nutrient levels. Testing ensures better accuracy when defining the ration.

Long forages are a combination of stem and leaf which cattle or sheep will selectively sort unless it is chopped. Chopping encourages total plant consumption thereby reducing waste.

Highline® offers an option to assist producers in metering grain into forage rations. Grain insertion into the processing chamber prevents selective consumption of grain over other diet ingredients and ensures even distribution through the windrow.

Our list of labour saving Bale Pro® models includes the CFR 1251 which can blend two different types of forage and grain in one pass. This unique technology is a method to lower the cost of production while meeting all nutrient requirements for the animal.

4 BALE PRO®

models

4 NEW MODELS - each with unique advantages.

The new Bale Pro® series from Highline® allows you to efficiently process round and square bales (model dependent). With 4 new options to choose from there's one that is the best fit for your cattle operation. The Bale Pro® modular system allows you to expand your machine as your operation evolves.

Dual Feed Roller Processor
Requires Minimal Maintenance

BP 660 Bale Pro®

PAGE 12

Chain & Slat Processor
Offers Ease of Use

BP 661 Bale Pro®

PAGE 18

Delivers Effective Bedding and Coverage
Solutions for Agriculture and Construction

BP 663 TOP GUN®

PAGE 24

Process Square or Round Bales - Adds Flexibility
When Using Multiple Forages

BP 965 Bale Pro®

PAGE 30

BP 660

PROCESS this way

The BP 660 Bale Pro® is a great option for cattle operations looking for a durable, well-engineered bale processor. The BP 660 Bale Pro® has a dual feed roller processing chamber with a centrally driven flail drum. Expand your BP 660 by adding a Feed Chopper™ and Grain Tank (See page 38 for additional information on the Bale Pro® modular system).

PRECISION feeding

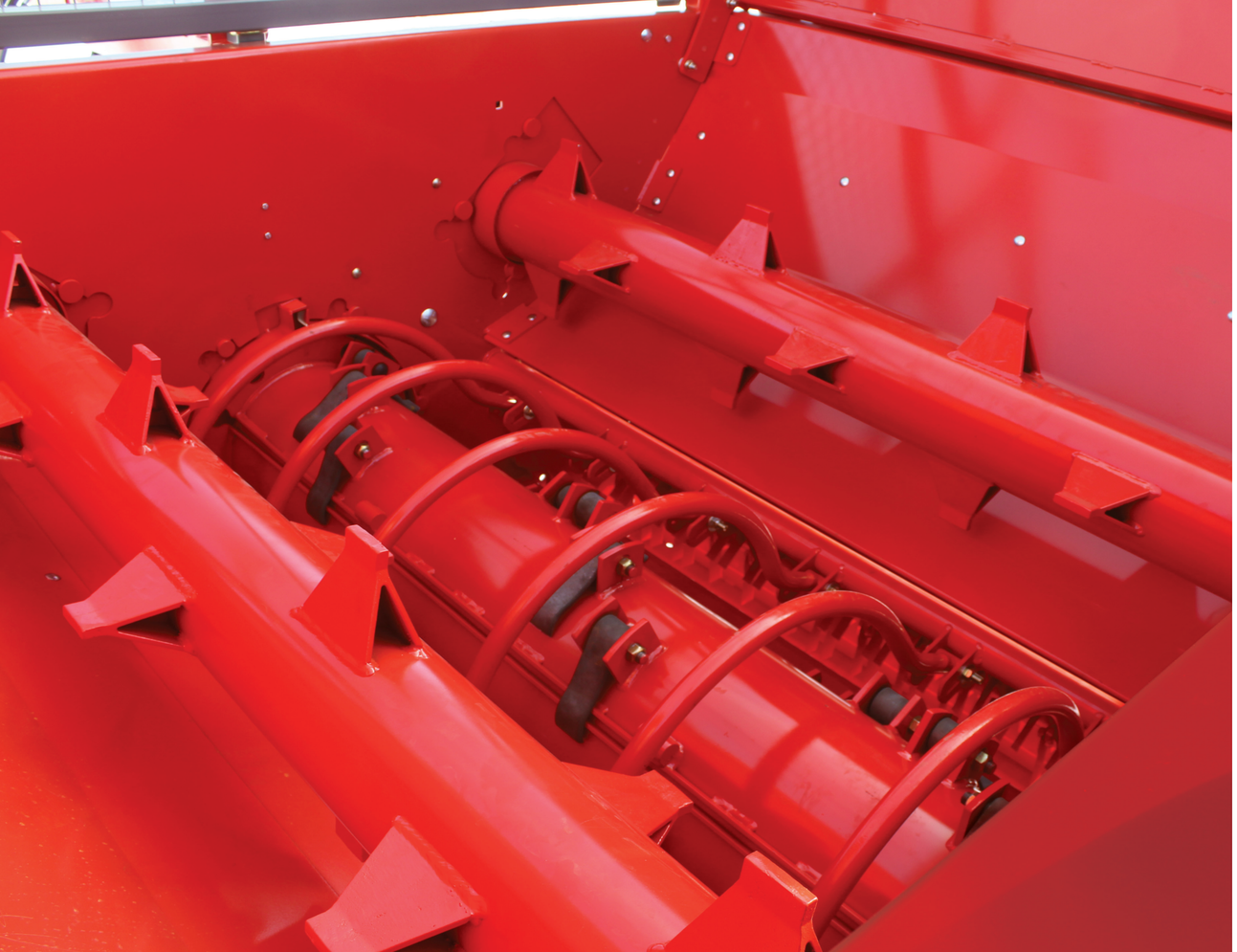

The **Dual Feed Roller Processing Chamber** of the **BP 660 Bale Pro®**

Dual feed roller processing chamber also on the BP 663 TOP GUN® and BP 965 Bale Pro®.

The Highline® flails efficiently "bite" into the bale for uniform feed processing. The flails are optimally sized to grab the bale.

The new stepped shaft design is machined from a single length of material vastly improving strength and durability of the drum.

The flails are designed in a spiral formation. This spiral formation ensures that the bale is continuously pulled and processed resulting in consistent feed. Also, the flail drum is digitally balanced for smooth performance and long bearing life.

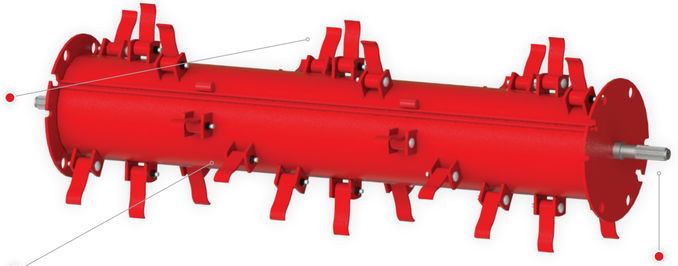

NEW Stepped Shaft Design

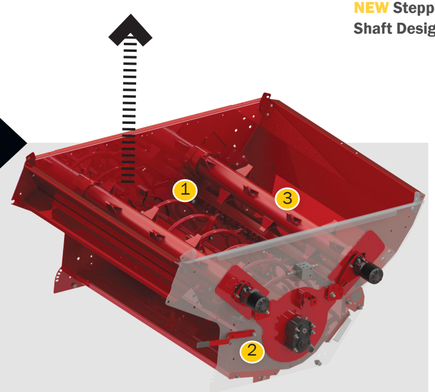

1 Guard Rods

The bale sits partially on the guard rods. The flails protrude through the guard rods grabbing the bale and pulling it through. The guard rods are shaped to provide a very uniform rate of processing.

Additional guard rods can easily be added for more bale control while processing.

2 Adjustable Aggression

Bales can be processed more or less aggressively depending on your needs. Processing can be set in a range of 1-5, with 1 being the slowest and 5 being the fastest processing rate. Flails engage the bale from $^{1}/_{8}$" up to 1 $^{3}/_{4}$" for faster processing.

3 Feed Rollers

Newly designed Highline® feed rollers now come with four rows of aggressive steel teeth. This design pulls the feed through for more consistent processing and reduced build up of material. The dual feed rollers allow the flail drum to be centrally located in the chamber providing up to 60' (18.3 m)* of material discharge distance.

** Contingent on environmental and operating conditions.*

NEW Fork Position Indicator

For improved positioning when loading the second bale.

Adjustable Axles

Adjust to a wide stance in uneven terrain for additional support, or adjust to a narrow stance for passing through gates and narrow barn doors.

Hi-Flotation Tires

Each Bale Pro® model is designed with appropriately sized hi-flotation tires allowing for easy maneuverability through challenging terrain.

Axle Twine Guard

The Axle Twine Guard eliminates the nuisance of twine getting tightly wrapped around the wheel axle.

NEW Discharge Door

Self cleaning when lifted and the door is extendable up to 15" (.38 m) for adjusting windrow drop position. Hinged end curtain for better windrowing.

NEW Fork Length

New fork length of 67 ½" (1.71 m) to accommodate modern size bales.

Adjustable Forks

Lift bales from the smallest silage up to 6' (1.83 m). Lift from the row and load them into the Bale Pro®.

NEW Rear Deflectors

Standard on all models.

NEW Screen Design

For better material containment.

Dual Feed Roller Processing Chamber

(See page 15).

NEW Hose Holder

Keep hoses protected and out of the mud! Quickly hook up to the tractor with the hoses now located conveniently beside the tractor remotes. The hose holder locks out of the way during backing up or for shipping.

NEW Motor Protection Valve

Reduces pressure spikes increasing the motor life and durability.

BP 660 SPECIFICATIONS

	Base 660 Bale Pro®	Base 660 Bale Pro® with Feed Chopper*	Base 660 Bale Pro® with Grain Tank	Base 660 Bale Pro® with FC* & GT**
PTO Minimum HP	85 hp (64 kW)	125 hp (94 kW)	100 hp (75 kW)	125 hp (94 kW)
PTO Recommended HP	100 hp (75 kW)	140 hp (105 kW)	125 hp (94 kW)	140 hp (105 kW)
Transport Width	108" (2.74 m)	110" (2.79 m)	144" (3.66 m)	144" (3.66 m)
Transport Height	115 ½" (2.93 m)	115 ½" (2.93 m)	115 ½" (2.93 m)	115 ½" (2.93 m)
Working Height Maximum	152 ½" (3.87 m)	152 ½" (3.87 m)	152 ½" (3.87 m)	152 ½" (3.87 m)
Length to End of Tires	174 ½" (4.43 m)	174 ½" (4.43 m)	174 ½" (4.43 m)	174 ½" (4.43 m)
Length to End of Forks Down	223 ½" (5.68 m)	223 ½" (5.68 m)	223 ½" (5.68 m)	223 ½" (5.68 m)
Discharge* **	Right Hand	Right Hand	Right Hand	Right Hand
Weight	5180 lb (2331 kg)	5990 lb (2696 kg)	6120 lb (2754 kg)	6930 lb (3119 kg)
Tongue Weight (Unloaded)	1755 lb (790 kg)	1995 lb (898 kg)	2040 lb (918 kg)	2310 lb (1040 kg)
Hydraulics	3 Remote	3 Remote	3 Remote	3 Remote
Driveline	1000 rpm PTO 1⅜" 21 Spline	1000 rpm PTO 1⅜" 21 Spline	1000 rpm PTO 1⅜" 21 Spline	1000 rpm PTO 1⅜" 21 Spline
Tires	16.5L x 16.1	16.5L x 16.1	16.5L x 16.1	16.5L x 16.1
Size of Bales	Up to 6' (1.83 m) diameter	Up to 6' (1.83 m) diameter	Up to 6' (1.83 m) diameter	Up to 6' (1.83 m) diameter
Discharge End Curtains, Top and Rear Deflectors	Standard	Standard	Standard	Standard
2 Hydraulic Remote	Option	Option	Option	Option

** FC - Feed Chopper*
*** Grain Tank capacity - 45 bushels (1587 L)*

**** Right/left hand is determined by sitting in the tractor seat looking forward.*

All weights and transport dimensions are estimates and are subject to change.

While every effort has been made to ensure that the information is accurate/current at the time of production, all specifications are subject to change.

If livestock is being fed, it is the operator's responsibility to ensure that the materials in the processed feed mix are suitable. Some of the wrapping material (twine, net wrap or other materials) may be discharged with the feed if the wrapping materials are not removed prior to processing.

For the latest product information, please visit: www.highlinemfg.com.

BP 661

PROCESS that way

The BP 661 Bale Pro® is also a great option for cattle operations looking for a durable, well-engineered bale processor. An alternative to the BP 660 Bale Pro®, the 661 Bale Pro® has a slat and chain processing chamber with an offset flail drum. Expand your BP 661 by adding a Feed Chopper™ and Grain Tank (See page 38 for additional information on the BP modular system).

PRECISION feeding

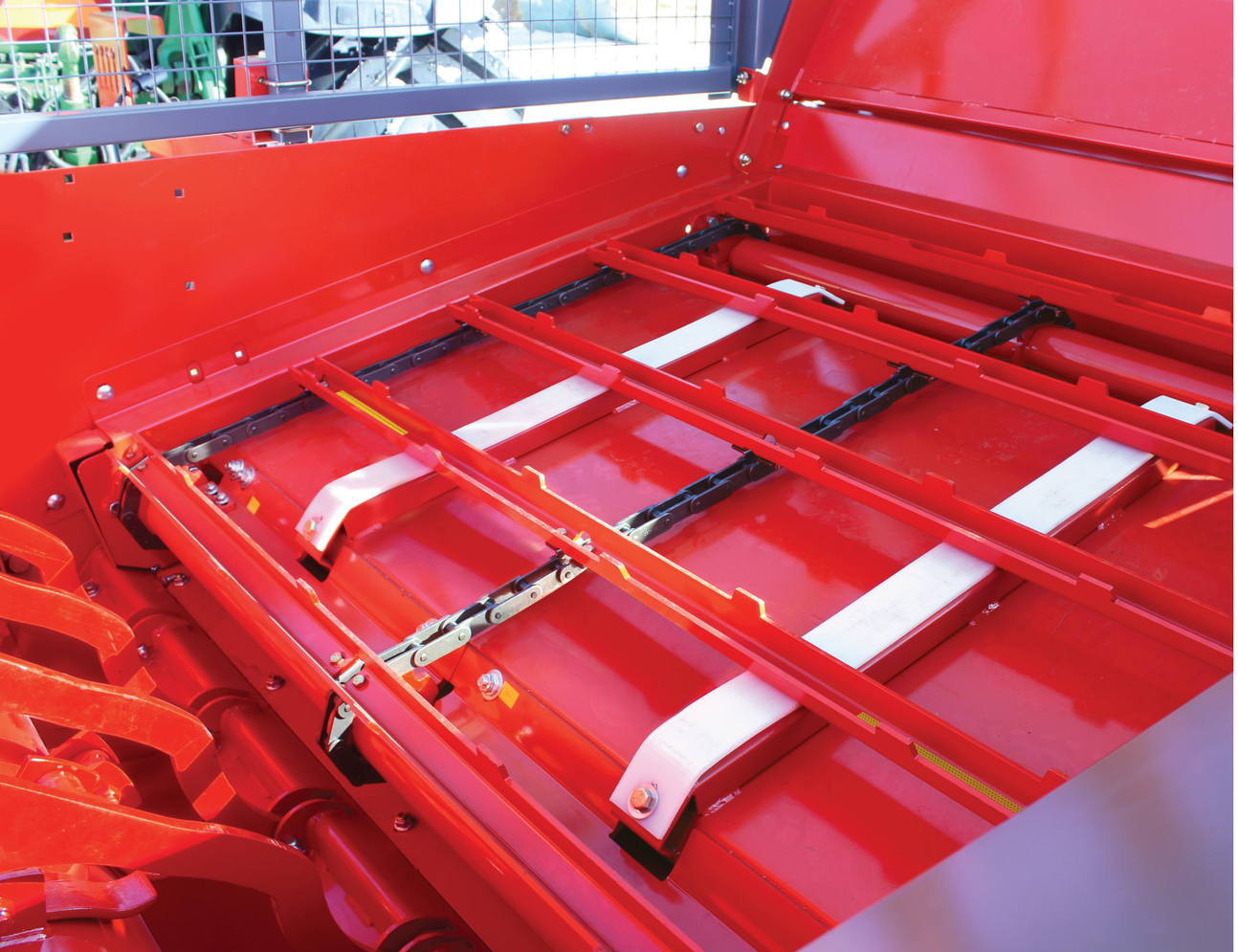

The **Slat & Chain Processing Chamber**
of the **BP 661 Bale Pro®**

The Highline® flails efficiently "bite" into the bale for uniform feed processing. The flails are optimally sized to grab the bale.

The new stepped shaft design is machined from a single length of material vastly improving strength and durability of the drum.

The flails are designed in a spiral formation. This spiral formation ensures that the bale is continuously pulled and processed resulting in consistent feed. Also, the flail drum is digitally balanced for smooth performance and long bearing life.

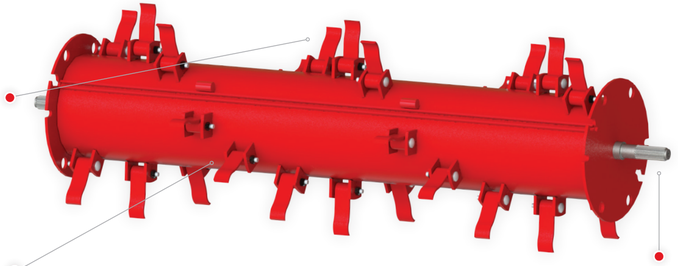

NEW Stepped Shaft Design

1 Guard Rods

Guard rods are designed for uniform processing from beginning to end.

2 Adjustable Aggression

Bales can be processed more or less aggressively depending on your needs. Processing can be set in a range of 1-5, with 1 being the slowest and 5 being the fastest processing rate. Flails engage the bale from 1/8" up to 1 1/2" for faster processing.

3 Slat & Chain Feeder

The Highline® Slat & Chain feed system is designed utilizing durable 2080H chain with no central bearing on the feeder chain rollers.

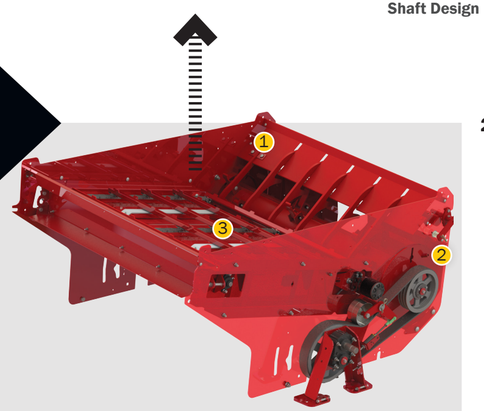

NEW Fork Position Indicator

For improved positioning when loading the second bale.

NEW Fork Length

New fork length of 67 ½" (1.71 m) to accommodate modern size bales.

Adjustable Forks

Lift bales from the smallest silage up to 6' (1.83 m). Lift from the row and load them into the Bale Pro®.

Adjustable Axles

Adjust to a wide stance in uneven terrain for additional support, or adjust to a narrow stance for passing through gates and narrow barn doors.

NEW Side Shields

Contoured to match modern bale profiles for improved flail engagement.

NEW Rear Deflectors

Standard on all models.

NEW Screen Design

For better material containment.

Hi-Flotation Tires

Each Bale Pro® model is designed with appropriately sized hi-flotation tires allowing for easy maneuverability through challenging terrain.

Slat & Chain Processing Chamber

(See page 21).

Axle Twine Guard

The Axle Twine Guard eliminates the nuisance of twine getting tightly wrapped around the wheel axle.

NEW Discharge Door

Self cleaning when lifted and the door is extendable up to 15" (.38 m) for adjusting windrow drop position. Hinged end curtain for better windrowing.

NEW Hose Holder

Keep hoses protected and out of the mud! Quickly hook up to the tractor with the hoses now located conveniently beside the tractor remotes. The hose holder locks out of the way during backing up or for shipping.

NEW Drive Tensioning System

Easy and simple to use tensioner keeps the belt tight to avoid slippage.

BP 661 SPECIFICATIONS

	Base 661 Bale Pro®	Base 661 Bale Pro® with Feed Chopper*	Base 661 Bale Pro® with Grain Tank	Base 661 Bale Pro® with FC* & GT**
PTO Minimum HP	85 hp (64 kW)	125 hp (94 kW)	100 hp (75 kW)	125 hp (94 kW)
PTO Recommended HP	100 hp (75 kW)	140 hp (105 kW)	125 hp (94 kW)	140 hp (105 kW)
Transport Width	107 ½" (2.73 m)	107 ½" (2.73 m)	149" (3.78 m)	149" (3.78 m)
Transport Height	115 ½" (2.93 m)	115 ½" (2.93 m)	121" (3.07 m)	121" (3.07 m)
Working Height Maximum	152 ½" (3.87 m)	152 ½" (3.87 m)	152 ½" (3.87 m)	152 ½" (3.87 m)
Length to End of Tires	174 ½" (4.43 m)	174 ½" (4.43 m)	174 ½" (4.43 m)	174 ½" (4.43 m)
Length to End of Forks Down	223 ½" (5.68 m)	223 ½" (5.68 m)	223 ½" (5.68 m)	223 ½" (5.68 m)
Discharge* **	Right Hand	Right Hand	Right Hand	Right Hand
Weight	5756 lb (2611 kg)	6567 lb (2979 kg)	6696 lb (3037 kg)	7507 lb (3405 kg)
Tongue Weight (Unloaded)	1895 lb (860 kg)	2167 lb (983 kg)	2210 lb (1002 kg)	2478 lb (1124 kg)
Hydraulics	3 Remote	3 Remote	3 Remote	3 Remote
Driveline	1000 rpm PTO 1⅜" 21 Spline	1000 rpm PTO 1⅜" 21 Spline	1000 rpm PTO 1⅜" 21 Spline	1000 rpm PTO 1⅜" 21 Spline
Tires	16.5L x 16.1	16.5L x 16.1	16.5L x 16.1	16.5L x 16.1
Size of Bales	Up to 6' (1.83 m) diameter	Up to 6' (1.83 m) diameter	Up to 6' (1.83 m) diameter	Up to 6' (1.83 m) diameter
Discharge End Curtains, Top and Rear Deflectors	Standard	Standard	Standard	Standard
2 Hydraulic Remote	Option	Option	Option	Option

** FC - Feed Chopper*
*** Grain Tank capacity - 45 bushels (1587 L)*

**** Right/left hand is determined by sitting in the tractor seat looking forward.*

All weights and transport dimensions are estimates and are subject to change.

While every effort has been made to ensure that the information is accurate/current at the time of production, all specifications are subject to change.

If livestock is being fed, it is the operator's responsibility to ensure that the materials in the processed feed mix are suitable. Some of the wrapping material (twine, net wrap or other materials) may be discharged with the feed if the wrapping materials are not removed prior to processing.

For the latest product information, please visit: www.highlinemfg.com.

TOP GUN®

DELIVERING EFFECTIVE
bedding solutions

The Highline® BP 663 TOP GUN® is a rugged, highly effective agricultural implement for bedding and feeding applications, as well as coverage solutions for environmental and land reclamation. It provides uniform coverage as it throws material up to 80 feet (24.3 meters)*, or feeds by gently dropping a windrow from its side discharge.

** Contingent on environmental and operating conditions.*

PRECISION feeding

NEW Fork Design

Ability to load round or square bales!

Dual Feed Roller Processing Chamber

(See page 15).

Hydraulically Operated Discharge Door

Gently drop a windrow from its side discharge. (Optional, not shown)

Hi-Flotation Tires

Each Bale Pro® model is designed with appropriately sized hi-flotation tires allowing for easy maneuverability through challenging terrain.

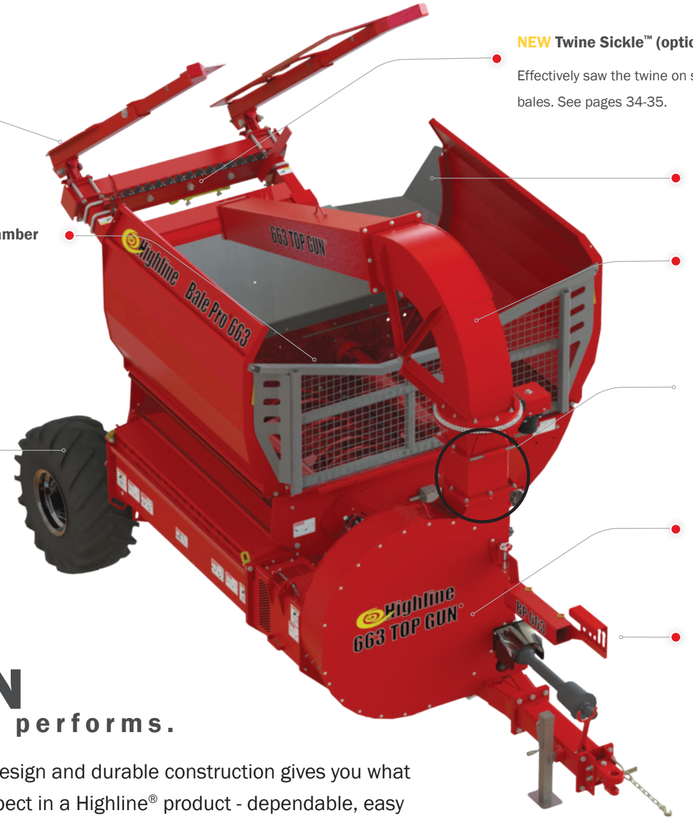

NEW Twine Sickle™ (optional)

Effectively saw the twine on square bales. See pages 34-35.

NEW Rear Deflectors

Capacity for an 8' (2.4 m) bale.

Easily Maneuvered, High Discharge Chute

Allows you to distribute product to the right or the left of the machine.

Removable section to reduce turret height where overhead clearance is an issue (monoslope or hoop barns).

Large, Durable Fan and Auger Assembly

(See page 27).

NEW Hose Holder

Keep hoses protected and out of the mud! Quickly hook up to the tractor with the hoses now located conveniently beside the tractor remotes. The hose holder locks out of the way during backing up or for shipping.

DESIGN
that out performs.

The unique, simple design and durable construction gives you what you have come to expect in a Highline® product - dependable, easy operation with minimal maintenance and a long life.

Large, Durable Fan and Auger Assembly

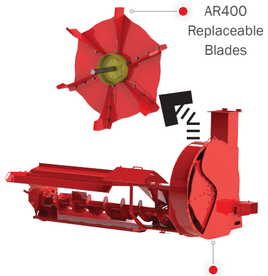

Twine Sickle™ (optional)

Effectively saw the twine on square bales.

See page 34-35.

The Far Reach Advantage

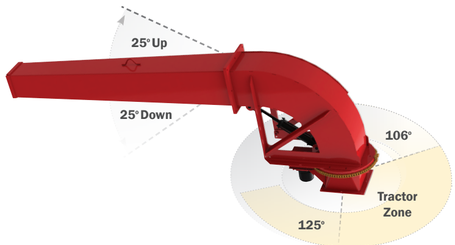

Easily and accurately position the discharge chute from the tractor cab for accurate placement of feed or bedding. With a wide range of motion (chute rotates 106 degrees left and 125 degrees right, as well as 25 degrees up and down), the discharge chute (84" (2.13 m) long, 11' (3.35 m) high nozzle) can be directed to throw material up to 80' (24.3 m)*.

NOTE: Right/Left hand is determined by sitting in the tractor seat looking forward.

** contingent on environmental and operating conditions.*

Curved Discharge Chute with End Deflector (optional)

Joystick Control (optional)

The joystick control option is an easy to use single remote control for all functions including bale load, bale rotation and discharge chute control both horizontally and vertically. This option results in less operator fatigue with very little effort to perform all hydraulic functions of the machine.

The Most Efficient Way to Put Out Bedding. Never Open a Gate Again.

How many times has an open gate ended with chasing cattle back into the pen? Frustration, lost time and potentially dangerous situations are all something that producers want to avoid, and now can with the Highline® TOP GUN®. With the 11' (3.35 m) high nozzle, the TOP GUN® can easily reach over the top of bunks and fences to blow straw into pens to bed cattle.

The TOP GUN® makes feeding and bedding a quick and comfortable process for both the cattle and yourself.

TOP GUN® SPECIFICATIONS

PTO Recommended HP	165 hp (124 kW)
Transport Width	110" (2.79 m)
Transport Height	133 ½" (3.39 m)
Working Height Maximum (Forks Extended)	190" (4.83 m)
Length to End of Tires	203" ½" (5.16 m)
Length to End of Forks Down (Extended)	305" (7.47 m)
Weight	8230 lb (3704 kg)
Tongue Weight (Unloaded)	2857 lb (1286 kg)
Discharge	Left/Center/Right

Hydraulics	3 Remote
Driveline	1000 PTO 1 ⅜" 21 Spline with over-running clutch
Tires	16.5L x 16.1
Max. Size of Bales	
Round	6' x 6' (1.83 x 1.83 m)
Square	4' x 4' x 8' (1.2 x 1.2 x 2.4 m)
Top & Rear Deflectors	Standard
Rear Facing Lights	Option
Discharge End Curtains	Option
2 Hydraulic Remote	Option

All weights and transport dimensions are estimates and are subject to change.

While every effort has been made to ensure that the information is accurate/current at the time of production, all specifications are subject to change.

If livestock is being fed, it is the operator's responsibility to ensure that the materials in the processed feed mix are suitable. Some of the wrapping material (twine, net wrap or other materials) may be discharged with the feed if the wrapping materials are not removed prior to processing.

For the latest product information, please visit: www.highlinemfg.com.

BP 965

REAL flexibility

Ideal for feeding and bedding - the BP 965 Bale Pro® offers all of the proven design features found on the Highline® Bale Pro® series with the added flexibility to process round or square bales as desired...as well as other beneficial design features like a 9' (2.74 m) flail drum which increases processing rate.

PRECISION feeding

SIMPLE
Design.

Loads large square bales lengthwise.

ROUND OR SQUARE . . IT DON'T CARE!

Adjustable forks for round or square bales:

The low profile fork cradles easily slide under the square bale allowing a single bale to be loaded without backing while the high outer edges account for misalignment by funneling the bale in between the two forks.

Loading rounds from a tight row? Simply pull a pin on each fork to collapse the extensions, allowing you to load without contacting the bale behind.

EXTREME
Lifting Power.

With the highest breakout force in the industry, the Highline® Vertical Lift design allows you to release even the most stubbornly frozen bales from the ground with ease. Also, because the bale is lifted straight up off of the ground, the scrubbing action against the bale stack is minimized, reducing bale damage and waste.

Lift Capacity

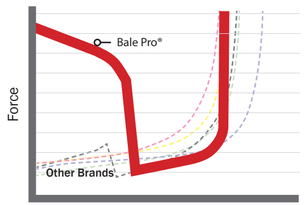

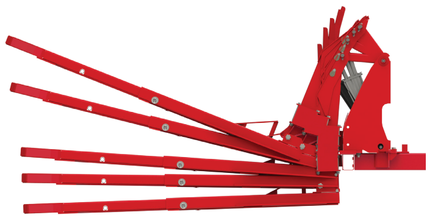

EFFICIENT LENGTHWISE PROCESSING
of Square Bales.

One of the challenges of processing square bales is maintaining both a high loading efficiency AND high processing efficiency (the competition fails to deliver on either one or the other). The BP 965 Bale Pro® capable of processing a 4' x 4' x 9' **(1.2 x 1.2 x 2.7 m) bale in minutes! The Twine Sickle™ Bale Prepping System on the BP 965 helps with this efficiency.*

The vertical bale lift is a 2 stage lift system where the first stage of the process lifts the bale straight off of the ground. Little space is required to accommodate this design.

The bale is lifted.

The bale is aligned with the flail drum for efficient processing.

The Twine Sickle™ saws the twine and the bale is dropped loosely into the tub (the loose consistency helps with uniform processing).

**Bale processing times are contingent on bale type, aggression setting and tractor horsepower.*
***Forages may react differently when the twine pressure is removed.*

HOW IT WORKS:

As the square bale is lifted, it slides down onto the cutting bar where its weight engages the teeth. A hydraulic cylinder is actuated from the cab which slides the Twine Sickle™ sections through the end of the bale and cuts the twine, prior to dumping the bale in the processing chamber. The cutting of the twine prior to loading the bale in the tub results in faster processing.

EASILY SAW THROUGH TWINE

WITH THE TWINE SICKLE™ BALE PREPPING SYSTEM

(for square bales)

The Twine Sickle™ - The Bale Prepping System uses the weight of the square bale to effectively saw the twine prior to processing.

NEW Fork Position Indicator

For improved positioning when loading the second bale.

Adjustable Axles

Adjust to a wide stance in uneven terrain for additional support, or adjust to a narrow stance for passing through gates and narrow barn doors.

Hi-Flotation Tires

Each Bale Pro® model is designed with appropriately sized hi-flotation tires allowing for easy maneuverability through challenging terrain.

Axle Twine Guard

The Axle Twine Guard eliminates the nuisance of twine getting tightly wrapped around the wheel axle.

NEW Twine Sickle™

Effectively saw the twine on square bales.

See pages 34-35.

NEW Fork Design

Adjustable length fork design for round or square bales.

NEW Rear Deflectors

Standard on all models.

NEW Screen Design

For better material containment.

Dual Feed Roller Processing Chamber

(See page 15).

NEW Hose Holder

Keep hoses protected and out of the mud! Quickly hook up to the tractor with the hoses now located conveniently beside the tractor remotes. The hose holder locks out of the way during backing up or for shipping.

NEW Discharge Door

Self cleaning when lifted and the door is extendable up to 15" (.38 m) for adjusting windrow drop position. Hinged end curtain for better windrowing.

NEW Heavy Duty Gearbox

NEW Motor Protection Valve

Reduces pressure spikes increasing the motor life and durability.

BP 965 SPECIFICATIONS

	Base 965 Bale Pro®	Base 965 Bale Pro® with Feed Chopper®
PTO Minimum HP	100 hp (75 kW)	125 hp (94 kW)
PTO Recommended HP	115 hp (86 kW)	140 hp (105 kW)
Transport Width	108" (2.74 m)	110" (2.79 m)
Transport Height	115 ½" (2.93 m)	115 ½" (2.93 m)
Working Height Maximum	190" (4.83 m)	190" (4.83 m)
Length to End of Tires	198" (5.03 m)	198" (5.03 m)
Length to End of Forks Down	290" (7.37 m)	290" (7.37 m)
Discharge* **	Right Hand	Right Hand
Hydraulics	3 Remote	3 Remote
Driveline	1000 rpm PTO 1⅜" 21 Spline	1000 rpm PTO 1⅜" 21 Spline
Weight	7040 lb (3168 kg)	8115 lb (3652 kg)
Tongue Weight (Unloaded)	2363 lb (1063 kg)	2727lb (1227 kg)
Tires	16.5L x 16.1	16.5L x 16.1
Max. Size of Bales		
Round	6' (1.83 m)	6' (1.83 m)
Square	4' x 4' x 9' (1.2 x 1.2 x 2.7 m)	4' x 4' x 9' (1.2 x 1.2 x 2.7 m)
Discharge End Curtains, Top and Rear Deflectors	Standard	Standard
2 Hydraulic Remote	Option	Option

All weights and transport dimensions are estimates and are subject to change.

While every effort has been made to ensure that the information is accurate/current at the time of production, all specifications are subject to change.

If livestock is being fed, it is the operator's responsibility to ensure that the materials in the processed feed mix are suitable. Some of the wrapping material (twine, net wrap or other materials) may be discharged with the feed if the wrapping materials are not removed prior to processing.

For the latest product information, please visit: www.highlinemfg.com.

*** Right/left hand is determined by sitting in the tractor seat looking forward.*

the Bale Pro® MODULAR SYSTEM

The **Bale Pro®** modular system adds flexibility to your Bale Pro® system allowing you to add components as your operation requirements shift.

1 THE Base Bale Pro®

Highline® Bale Pros® aggressively spin and loosen the bale for uniform feeding into the flail processing chamber, allowing for range or bunk feeding.

2 Feed Chopper™

The Highline® Feed Chopper™ is a secondary processing option that allows you to produce a consistent, shorter cut length; the shorter cut length creates a more consistent feed output and gets rid of long stems.

3 NEW Grain Tank

The **NEW** hydraulically driven Grain Tank boasts a 45 bushel (1587 l) tank. The grain is inserted, rather than dropped onto the forage resulting in an evenly mixed feed ration.

Bale Pro®

= BP

How the BP System Impacts the Bottom Line - Analyze The Numbers

The Bale Pro® System:

- Reduces the labor requirements to provide proper nutrition. This provides the greatest benefits at calving season—no chop pails or rolled grain wagons, no necessity for 2 operators and 2 tractors.
- Eliminates the cost to own or rent a tub grinder.
- Eliminates waste from spoilage of batch processing.
- Ability to run bedding through the Feed Chopper™ increases absorption in various indoor applications.

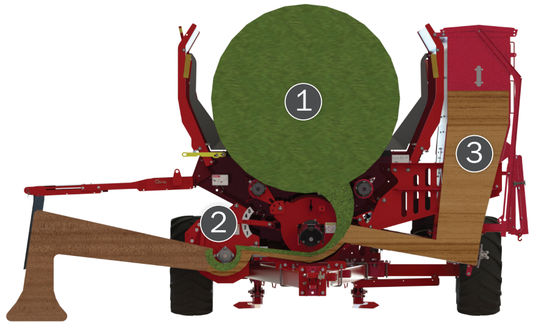

*looking from the front of the Bale Pro®

1. The bale is processed.
2. The Feed Chopper™ slices processed forage, cracks grain and blends the mix into a ration.
3. Metered grain is inserted into the feed stream.

1 the BASE BALE PRO®

BP 660 / BP 661 / BP 663 TOP GUN® / BP 965

Highline's Bale Pros® chop and mix round or square bales (model dependent), reducing sorting and waste.

The Bale Pro® advantages:

Adjustable Discharge Door

Accommodate a wide range of bunks or windrowing with this highly adjustable discharge door.

Extremely Durable Construction

The durable, 6 X 4 A-Frame design and continuous tube structure of all Bale Pros® handles heavy loads. The continuous frame member eliminates weld stress points when operating in harsh environments.

2 Stage Bale Lift

The 2 stage vertical lift reduces the bale being lifted from "scrubbing" on the bales in the bale stack, as well as eliminates the need to clutch the tractor between bales.

1 the BASE BALE PRO®

BP 660 / BP 661 / BP 663 TOP GUN® / BP 965

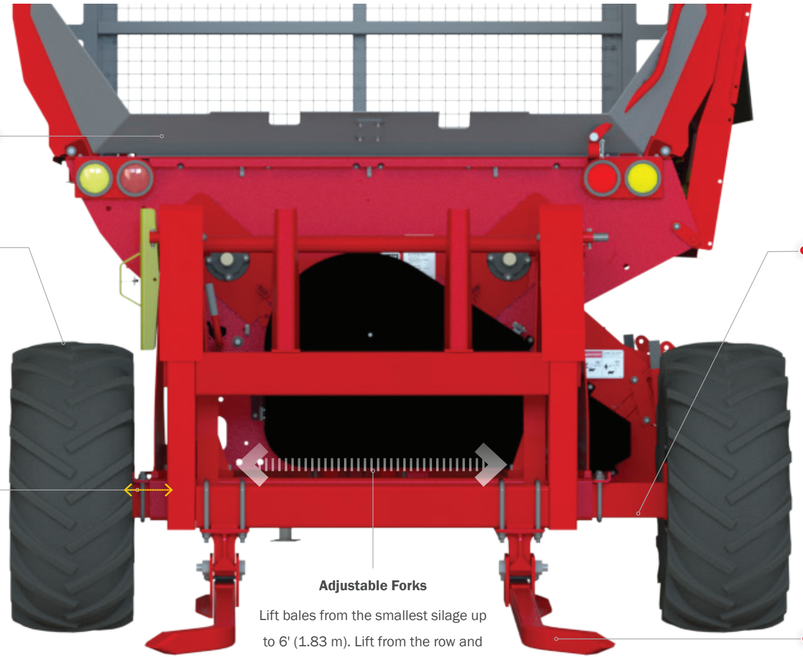

NEW Rear Deflectors

Standard on all models.

Hi-Flotation Tires

Each Bale Pro® model is designed with appropriately sized hi-flotation tires allowing for easy maneuverability through challenging terrain.

Adjustable Axles

Adjust to a wide stance in uneven terrain for additional support, or adjust to a narrow stance for passing through gates and narrow barn doors.

Adjustable Forks

Lift bales from the smallest silage up to 6' (1.83 m). Lift from the row and load them into the Bale Pro®.

Axle Twine Guard

The Axle Twine Guard eliminates the nuisance of twine getting tightly wrapped around the wheel axle.

NEW Fork Length

New fork length of 67 ½" (1.71 m) to accommodate modern size bales.

Vertical Bale Lift

The Bale Pro® vertical bale lift has the highest breakout force of any bale processor on the market today. This force allows you to easily remove bales that are frozen to the ground. Vertical lift reduces the bale being lifted from "scrubbing" on the bales in the bale stack, as well as eliminates the need to clutch the tractor between bales.

The vertical bale lift is a 2 stage lift system where the first stage of the process lifts the bale straight off of the ground. Little space is required to accommodate this design. The competitors lack the 2 stage system. On competitors' systems, the bale rotation into the tub is started immediately resulting in limited force, as well as the need to pull ahead when loading a bale from a stack.

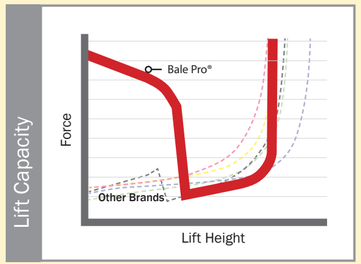

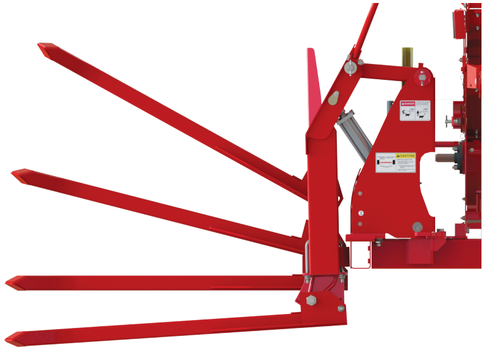

1 the BASE BALE PRO®

BP 660 / BP 661 / BP 663 TOP GUN® / BP 965

The image above shows what happens when feed is not placed in a windrow. Instead of standing and eating, the cattle wander around trampling and wasting valuable feed, as well as consuming additional energy.

Feeding in the Field.

Feeding cattle in a bunk or a windrow in the field reduces corral cleaning costs in spring; as well, the nutrients from the manure benefit the field biology.

Hydraulic Discharge Door.

The hydraulically operated discharge door "contains" the outputted material in a high, uniform mound. This high mound reduces the amount of sorting the cattle will do, and also deters excess walking and wasting of valuable energy.

Bedding Profiles of Highline Bale Pros®

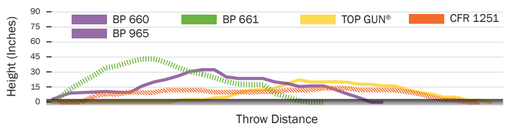

The graph on the left represents the bedding profiles of each of the different Highline® Bale Pros® in ideal conditions *(reaching maximum height and distance).* The results were taken while each Bale Pro® was stationary with each Bale Pro® processing one complete round bale. (*While feed and weather conditions can alter these measurements, the general pattern of each Bale Pro® remains consistent.)*

Efficient Processing

The Bale Pro® allows you to do double-duty; process one bale while carrying another on the forks. This saves time by allowing for continued operation before having to load again.

Loading bales is a simple one person operation from the comfort of the tractor cab.

Even Bedding

Create an even and lofty spread using a Highline® Bale Pro®. Quality bedding is produced while using less straw, saving on input costs.

2 the FEED CHOPPER™

BP 660 / BP 661 / BP 965

a Feed Chopper™ Blades

The Feed Chopper™ is designed with 128 blades spinning at 3,000 rpm to provide a uniform blend of shorter cut lengths of roughage. The blades are sharpened on both sides; if a blade is worn out or damaged, simply flip the blade over for a sharpened edge.

b Spring Tensioner

The spring tensioner has a wide setting range and this ensures adequate tension on the belt throughout its life. It is a maintenance free design, simply check the tension sight window to verify it's within operating conditions and go!

• Additional Benefits

Finished feeding and need to bed? The Feed Chopper™ can be easily disengaged and your throw profile adjusted by simply removing the 2 hair pins on either side of the Feed Chopper™ and adjusting the angle of the deflector pan for bedding purposes.

The Feed Chopper™

The Feed Chopper™, exclusively from Highline®, is a secondary processing option to create shorter cut lengths. Rather than stationary knives that pulverize or drag leaves off of stems, the Highline® Feed Chopper™ truly slices through the hay creating an optimal consistency. The Feed Chopper™ is a great alternative to tub grinders.

- **Improves Whole Plant Intake**

  Chopping reduces particle size of the whole plant improving intake of the stem portion. This is the part cows and sheep sort against. The efficiency of forage utilization improves, reducing the amount of forages for winter feeding the herd.

- **Reduces Waste While Increasing Palatability**

  Cattle have preferences in what they eat. For example, longer coarse feed and low quality hay may have adequate nutritional value, but are not eaten, creating feed waste. By chopping low quality hay, intake of feed is increased, cattle will clean up the windrow or feed bunks.

- **Minimizes Sorting**

  Consistent shorter cut length hay from the Feed Chopper™ ensures cattle do not sort different length material or grain. Now full feed utilization can occur while the cattle are eating the intended rations.

- **Flexibility of Feed Types**

  The Highline® Feed Chopper™ excels at cutting a wide range of bales including silage, corn or old straw bales. Feed sources can include: Corn Stover, Canola Straw, Green Feed, Alfalfa and Silage Bales, processed to an appropriate blend of cut lengths.

The Feed Chopper™ can be added as a field installed option to the BP 660, BP 661 and BP 965 Bale Pros®.

3 the GRAIN TANK

BP 660 / BP 661

The Grain Tank is a variable speed hydraulic drive feed system that allows for even and consistent flow.

Unique to bale processing, the Highline® metering system ensures uniform mixes each and every time...regardless of feed conditions! Even distribution of grain or pellets within the hay is critical to ensure a good combined feed mix. Because cattle prefer grain to hay, they will sort out the grain and leave the hay if possible. The hydraulic drive feed system inserts the grain directly into the hay stream (as opposed to placing it on top) ensuring an optimal mix. Feeding grain is critically important to cattle in cold weather, backgrounding and during the final stages of gestation. Proper nutrition is required if the cattle body condition is to be maintained which relates directly to healthy calving and desired weight gains.

Auger
Hydraulic motor with ample power along with a proportional valve for precise rate control.

Axle
The speed sensor offsets in the rim keeping it away from mud & twine.

Hydraulic Drive Feed System
With no complex driveline, evenly distribute your grain or pellets.

Grain Tank Features

Controlling Rations

It is vital to ensure that the amount of grain added into a ration is controlled. The amount of grain components in the ration needs to match up with the rumen's ability to utilize the grains. Increasing the grain components too quickly can result in acidosis and the animals going off feed. The Highline® hydraulic drive feed system precisely distributes the grain or pellets into the hay or straw windrow.

The hydraulic drive feed system now allows for stationary processing with precise grain addition – perfect for pre-processing for wagon or mixer feeding!

Control System Display
Easily set your rate for any feeding scenario. Enter the output you want, the calibration value, and start feeding.

Variable Speed Hydraulic Drive
Hydraulically driven metering can be instantly adjusted from the cab – no more distance meter or changing sprockets.

Electrical Ground Speed Sensing
No more complex auger driveline. Ground speed is determined from a speed sensor on the axle.

Gauge Windows
Easily view current grain levels through multiple gauge windows and confirm with the weight estimate on the display.

Tank Lid & Ladder
Large, 45 bushel (1587 L) tank with remote opener and a flip-down ladder to easily access the large 2' x 6' (.61 x 1.83 m) tank opening.


324
320
471
A
266
654

CFR 1251

EFFECTIVELY mix forages

Highline® takes precision ration delivery and flexibility to a higher level with the CFR 1251 Bale Pro®. This model represents the future utilizing dual chambers and independent settings allowing forage blending for optimal performance and the highest economic benefit. Crop residues and hay are combined, chopped and mixed thoroughly with the grain portion meeting animal requirements. Whether field or bunk feeding the CFR 1251 Bale Pro® puts premium animal care in your hands.

PRECISION feeding

THE CFR 1251 BALE PRO® **The TMR MIXER** that is not a TMR Mixer.
(with no extra mixing time).

The 1251 is a dual-chamber bale processor which offers many of the same benefits as a TMR Mixer. The 1251 provides the flexibility to process two bales at once, blending different types of forage into a healthy ration. With winter feed costs accounting for as much as 40% of total production costs, managing this variable can make or break the profitability of a cow/calf operation. The ability to utilize lower quality forage, along with high quality forage maximizes the efficiency of a winter feeding program and is critical in extending feed supplies on years when good hay is in short supply. When equipped with the optional Grain Tank with MGI™ and Feed Chopper™, the CFR 1251 really is an all-purpose machine that rivals a TMR mixer in producing a mixed forage/grain ration. And, it does this with lower operational costs and less capital investment. The 1251 is also an excellent machine for bedding and that's something that most TMR mixers can't do. In many cattle operations the CFR 1251 may be a greater return on investment than a TMR mixer.

CFR 1251 Complete Feed Ration

The CFR 1251 maximizes your ability to blend inputs; mixing the perfect balance of bales of varying quality with metered grain product; the result is optimized feed at a lower purchase point. Below are examples of how the CFR 1251 can positively affect your bottom line.

# Head	Hay 100%	Hay 50%	Straw 50%	Hay/Straw Blended Cost	Annual Savings
200	$46,800.00	$23,400.00	$ 9,750.00	$33,150.00	$13,650.00
300	$70,200.00	$35,100.00	$14,625.00	$49,725.00	$20,475.00
400	$93,600.00	$46,800.00	$19,500.00	$66,300.00	$27,300.00
500	$117,000.00	$58,500.00	$24,375.00	$82,875.00	$34,125.00

Assumptions*:

Feed	Hay	Straw
Weight (lb)	2000	1200
Cost (c / lb)	$0.076	$0.025
Cost ($ / bale)	$152	$30
Feed lb/day	30	
Feeding Days	130	

* Forage intake calculated for gestation period only, grain would be added when needed.

Retractable front bale loading conveyor allows the bale to gently transfers bale to front chamber.

Cameras

CFR Capability

Expand your 1251 Bale Pro® by adding the Grain Tank with MGI™

Heavy Duty Bale Transfer

Hydraulically Controlled Discharge Door

Hi-Flotation Tires
(21.5L X 16.1)

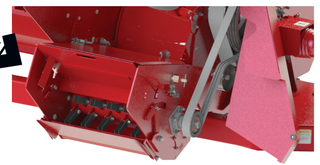

Independent Aggression Adjustment
Allow for blending of 2 forages at different rates.

The Slat & Chain Processing Chamber
(See page 21 for more details.)

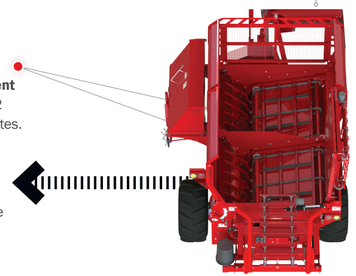

Feed Chopper™
(See pages 38-49 for more details on the BP system.)

CFR 1251 SPECIFICATIONS

	Base 1251 Bale Pro®	Base 1251 Bale Pro® with Feed Chopper™*	Base 1251 Bale Pro® with MGI™**	Base 1251 Bale Pro® with FC* & MGI™**
PTO Minimum HP	120 hp (89 kW)	160 hp (119 kW)	120 hp (89 kW)	160 hp (119 kW)
PTO Recommended HP	135 hp (101 kW)	175 hp (130 kW)	135 hp (101 kW)	175 hp (130 kW)
Transport Width	123" (3.12 m)	123" (3.12 m)	140" (3.56 m)	140" (3.56 m)
Transport Height	116" (2.95 m)	116" (2.95 m)	116" (2.95 m)	116" (2.95 m)
Working Height	142" (3.61 m)	116" (2.95 m)	116" (2.95 m)	116" (2.95 m)
Length	279" (7.09 m)	291" (7.39 m)	279" (7.09 m)	291" (7.39 m)
Weight	10343 lb (4691 kg)	10911 lb (4949 kg)	11032 lb (5004 kg)	11600 lb (5262 kg)
Tongue Weight (Unloaded)	1662 lb (754 kg)	1987 lb (901 kg)	1946 lb (883 kg)	2260 lb (1025 kg)
Hydraulics	2 or 3 Remote	2 or 3 Remote	2 or 3 Remote	2 or 3 Remote
Driveline	1000 PTO 1 ⅜" 21 Spline	1000 PTO 1 ⅜" 21 Spline	1000 PTO 1 ⅜" 21 Spline	1000 PTO 1 ⅜" 21 Spline
Tires	21.5L x 16.1	21.5L x 16.1	21.5L x 16.1	21.5L x 16.1
Size of Bales	Up to 6' (1.83 m) diameter	Up to 6' (1.83 m) diameter	Up to 6' (1.83 m) diameter	Up to 6' (1.83 m) diameter
Discharge* **	Right Hand	Right Hand	Right Hand	Right Hand
Discharge End Curtains	Standard	Standard	Standard	Standard
Rear View Cameras	Standard	Standard	Standard	Standard

** FC - Feed Chopper*
*** Grain Tank capacity - 30 bushels (1057 L)*
**** Right/left hand is determined by sitting in the tractor seat looking forward.*

All weights and transport dimensions are estimates and are subject to change.

While every effort has been made to ensure that the information is accurate/current at the time of production, all specifications are subject to change.

If livestock is being fed, it is the operator's responsibility to ensure that the materials in the processed feed mix are suitable. Some of the wrapping material (twine, net wrap or other materials) may be discharged with the feed if the wrapping materials are not removed prior to processing.

For the latest product information, please visit: www.highlinemfg.com.

Highline

PRECISION
feeding

YOUR LOCAL PROFESSIONAL HIGHLINE DEALER:

Printed in Canada - 05.21

Highline

Highway #27, PO Box 307
Vonda, SK, Canada S0K 4N0

www.highlinemfg.com