1020 Short spare parts list (1.150-908.3)

Professional \ High pressure cleaner cold water \ Electric motor \ HD 3.0/20 C Ea \ Short spare parts list

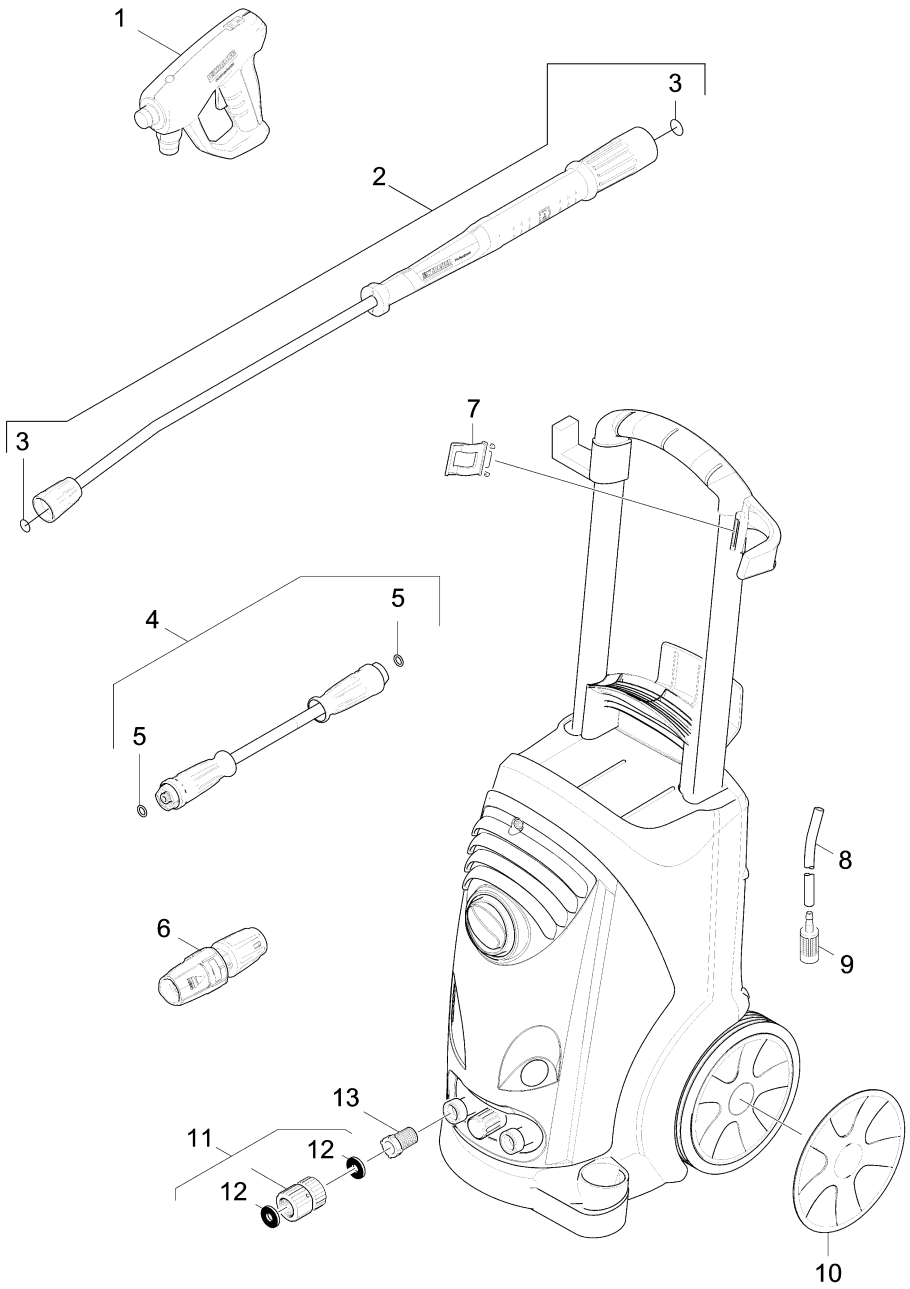

POS	Article no.	Description	Quantity	Unit	Foot note text
1	4.118-005.0	EASY!Force Advanced	1.000	ST	
2	4.112-006.0	Jet pipe TR 840 mm	1.000	ST	
3	2.880-001.0	Spare part set seals TR	1.000	ST	
4	6.110-034.0	Hose assembly TR DN6 25MPa 10m	1.000	ST	
5	2.880-154.0	O-Ring kit	1.000	ST	
6	4.117-035.0	Triple jet nozzle TR 043	1.000	ST	
7	5.044-216.0	Holder	1.000	ST	
8	6.388-216.0	Hose DN 5	1.000	M	TO ORDER AS CUT GOODS
9	5.731-652.0	Filter with weight	1.000	ST	
10	4.515-323.0	Spare parts set wheel cap basalt grey RA	1.000	ST	
11	4.401-059.0	Screw connector part	1.000	ST	
12	5.364-129.0	Flat gasket	1.000	ST	
13	6.414-252.0	Strainer	1.000	ST	